HALFEN

# FRIMEDA LIFTING ANCHOR SYSTEM
## Technical Product Information

YOUR BEST CONNECTIONS

TPA 20-E

## FRIMEDA LIFTING ANCHOR SYSTEM
**Certified quality from HALFEN — Connected to safety.**

HALFEN

MPA NRW. Materialprüfungsamt Nordrhein-Westfalen certified and surveyed No. 1˙ 7116

CE

VDI/BV-BS 6205

***The FRIMEDA Lifting Anchor System meets the requirements of the European machine guideline (MD) 2006/42/EC. The required steel load capacity for transport systems is defined in these guidelines.***

To also ensure safe use of transport anchor systems with the required resistance values for cast-in anchors, HALFEN Transport anchor and transport anchor systems also meet the requirements of VDI/BV-BS regulation 6205.

The regulation titled "Transport anchor and transport anchor systems for precast concrete elements" represents up-to-date technological knowledge in this field. HALFEN ensures a constant high standard of safety for its transport anchors and systems by complying with the requirements set in these regulations.

To confirm conformity with MD 2006/42/EC in conjunction with the VDI/BV-BS 6205 all HALFEN Transport anchor systems are CE marked.

**This catalogue is an installation and application instruction as defined in VDI/BV-BS 6205.**

To guarantee a high level of safety all HALFEN Anchors and anchor systems are subjected to regular self and third party quality control.

We guarantee continuous high quality and maximal safety for your company, your employees and your customers. This quality is ensured by external controlling and confirmed with the CE mark.

## HALFEN — dependability

**High ductility — high performance even in extreme situations**

Specially tempered steel guarantees extensive elastic and plastic properties. The required unique steel compositions to achieve product characteristics are specified by HALFEN. Numerous tests and many years of experience guarantee best possible results and maximum reliability in all applications.

**Toughness at subzero temperatures — same characteristics irrespective of weather conditions**

The special composition of the steel ensures constant identical characteristics (temperature independent).

Steel used by HALFEN exceeds the requirement of DIN EN 10025.

**Quality control — for reliable application**

By specifying products and material, continual raw material, product monitoring and testing by renown independent bodies and universities, our customers are assured that the quality and properties of all HALFEN anchors remain consistent.

© 2020 HALFEN · TPA 20-E · www.halfen.com

## CONTENT


| | |
|---|---|
| **General** | |
| Certified quality from HALFEN | 2–7 |
| System overview | 8–11 |
| Product range | 12–14 |
| **FRIMEDA Lifting anchor system — installation and application** | |
| Safety regulations / Identification | 15 |
| Anchor selection / Load calculation | 16–20 |
| Anchor installation | 21 |
| Tables, load class allocation | 22 |
| **FRIMEDA Lifting anchor** | |
| TPA-FS Spread anchor | 23–30 |
| TPA-FZ Two-hole anchor | 31–33 |
| TPA-FA /TPA-FE Double/single shoulder erection anchor (tilt-up) | 34–36 |
| TPA-FU Universal anchor 1,25–12 | 37 |
| TPA-FF Flat foot anchor | 38–39 |
| TPA-FP Plate anchor | 40 |
| TPA-FG Garage anchor | 41 |
| TPA-FX Sandwich panel anchor | 42–43 |
| TPA-FD Double-head (column) anchor | 44 |
| **FRIMEDA Recess former, holding plates, holding bolts and accessories** | |
| Installation and application | 45–47 |
| Types / allocation | 48–49 |
| **FRIMEDA Ring clutches** | |
| Application instructions | 50–51 |
| TPA-R1 Ring clutch with shackle for manual release | 52 |
| TPA-R2/ TPA-R3 Ring clutch with wire cables | 52 |
| Checking the connection fittings | 53 |
| TPA-F1 Ring clutch with pneumatic release | 54–55 |
| TPA-F2 Ring clutch with manual remote control with Bowden cable | 56–57 |
| **Accessories** | |
| Locking plate for FRIMEDA Lifting anchors | 58 |
| Application examples / further HALFEN products | 58–59 |
| Contact/Technical support | 60 |


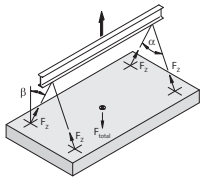

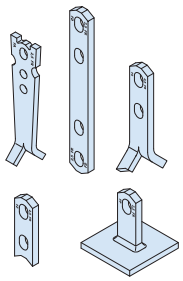

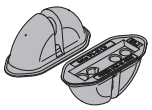

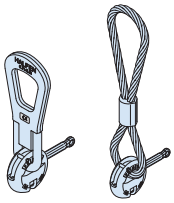

## FRIMEDA LIFTING ANCHOR SYSTEM
## System Advantages Overview

**The FRIMEDA Transport anchor is a high quality and cost effective system for transporting all types of concrete elements. The tilt-up anchor allows lifting horizontally-cast wall elements upright when not using a tilting table. A remote release is also available; this increases efficiency and safety when lifting tall elements. Our extensive range of anchors and accessories provide the perfect solution for nearly all lifting applications.**

**Fast, simple, safe**
The FRIMEDA Quick-clutch lifting system guarantees simple, safe and fast connection and disconnection of lifting links and anchors.

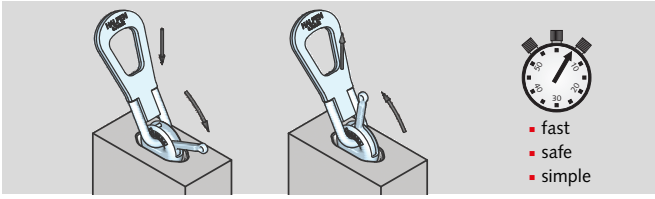


**Load range**
The FRIMEDA Quick-clutch lifting system can be used for load classes from 1.25 up to 26,0 t.

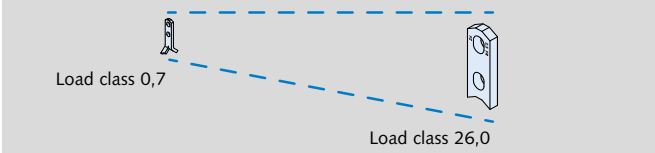


**High quality material**
We offer a wide selection of anchors in high quality killed-steel "special grade" with an alloy composition specially designed for transport applications in any environment.

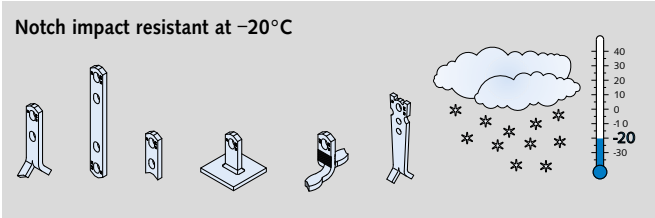


**Corrosion protection**
Apart from the mill-finished standard type, the majority of transport anchors in the FRIMEDA range are available in a zinc-galvanized and in a special, stainless steel type.

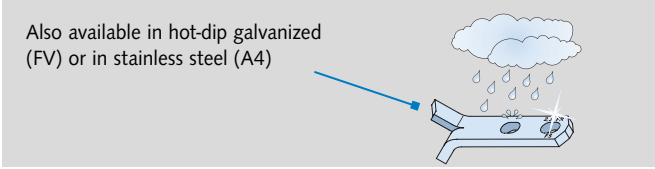


**Wide range of accessories**
A wide range of accessories, especially recess formers, guarantee cost-effective use in all applications.

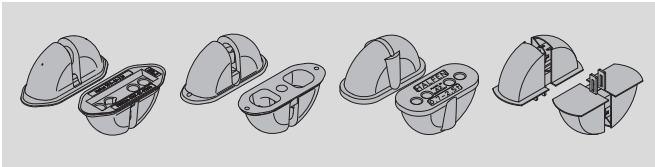

**FRIMEDA TPA – perfect for most applications**
FRIMEDA TPA is suitable for lifting and transporting precast elements regardless of shape and size.

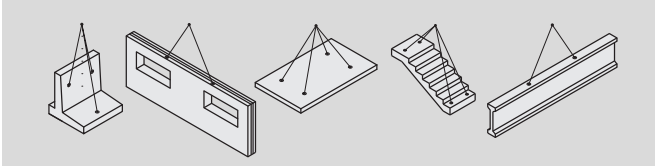

**Tilt-up of wall elements**
The FRIMEDA Erection anchor is the ideal solution for erecting horizontally transported walls on the construction site.

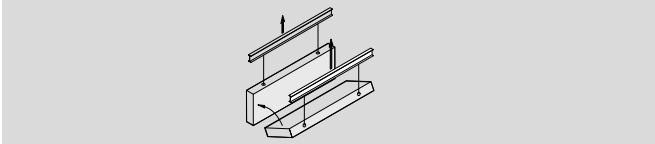


© 2020 HALFEN · TPA 20-E · www.halfen.com

## FRIMEDA LIFTING ANCHOR SYSTEM
## System Advantages Overview

### Avoid mix-ups
Even after installation, the load class, anchor length and the manufacturer's identification mark are easily and correctly identified on all anchors. This and the unique head shape ensures mix-ups are avoided!

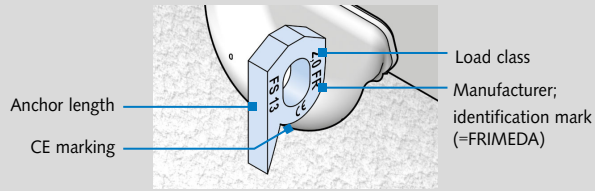


### Matching components
Anchor and lifting link are designed to ensure that only components with the same load class can be used together. The same principle applies to the design of the recess formers.

| | | | | | |
|---|---|---|---|---|---|
| Load class ring clutch | 1,25 | 2,5 | 5,0 | 10,0 | 26,0 |
| Load class recess former | 1,25 | 2,5 | 5,0 | 10,0 | 26,0 |
| Load class anchor | 1,25 | 1,4<br>2,5 | 3,0<br>4,0<br>5,0 | 7,5<br>10,0 | 12,5<br>14,0<br>17,0<br>22,0<br>26,0 |

### System safety
Maximal safety is only assured when using system components from the same manufacturer.

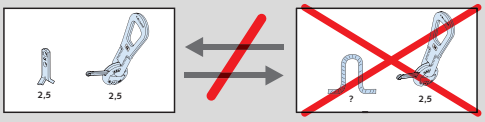


FRIMEDA Anchor Shaped rebar

### Steel failure safety factor
All anchors are sufficiently dimensioned to three times the safety factor for steel failure.

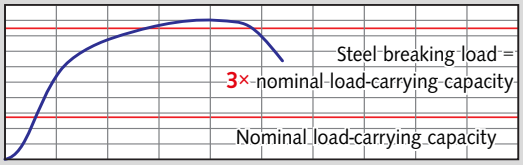


### Quality control
An extensive certified quality system monitors the complete production process; starting with incoming raw materials; monitoring at every stage of production and final check of the finished product.

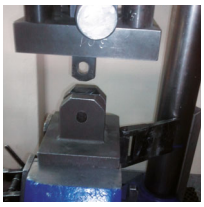

### Independent testing
Extensive meticulous testing of every part of the system by independent certification bodies and universities.

### CE conform
All HALFEN Lifting links and anchors are CE marked. This guarantees compliance with the relevant European regulations.

### Certified
All HALFEN production facilities are ISO 9001:2015 certified by the DNV-GL.
(DNV-GL=Det Norske Veritas-Germanischer Lloyd)

"The HALFEN GmbH Quality Management System is certified for HALFEN facilities in Germany, France, the Netherlands, Switzerland, Poland, Austria and the Czech Republic according to ISO 9001:2015, certificate-no. 202384-2016-AQ-GER-DAkkS."

QUALITY SYSTEM CERTIFICATION DNV·GL ISO 9001
www.dnvgl.com

# HALFEN Quality – from start to finish.

Quality and safety is the ultimate target in production of original FRIMEDA Lifting anchors; this applies to all HALFEN products. Therefore all HALFEN production facilities are ISO 9001 certified.

What exactly does this mean? On the one hand this involves continual inspection, machine maintenance and quality testing during the manufacturing process, on the other hand it involves stringent quality control procedures of incoming raw materials right through to delivery of the finished product.

QUALITY SYSTEM CERTIFICATION
DNV·GL
ISO 9001
Cert.-No.
202384-2016
-AQ-GER-DAkkS

Quality always comes first for HALFEN products and is guaranteed during every step of production.

Compliance of all lifting anchors with national and European technical requirement has been tested and approved by the Materials Testing Institute North Rhine-Westphalia (Materialprüfungsanstalt des Landes Nordrhein-Westfalen). All anchors produced are subject to stringent in-house and independent quality checks.

Spectral analysis

The extent, type and frequency of production checks carried out by HALFEN are defined by independent supervisory bodies

FRIMEDA Lifting anchors are made exclusively by HALFEN. Our products are made only with strictly regulated raw materials, which must meet our stringent material specifications. Suppliers of all raw materials and of finished products are also required to meet our stringent material specifications. Our suppliers must be ISO 9001 certified and must provide complete documentation on required performance and quality. Our suppliers must prove compliance with our material specifications with a 3.1 inspection certificate according to DIN EN 10204.

The inspection of incoming material is not limited to visual examination and dimension checks. Every consignment is also chemical analysed to ensure the correct chemical composition. Tensile tests are subsequently required to verify yield stress, ultimate tensile strength and elongation rupture.
After passing all test requirements and if in compliance with the 3.1 inspection certification the tested items are released into production.

The anchors are continually checked during production for dimensional precision. The required frequency for measurement control is determined by our quality manager.

Daily quality checks in which each and every produced batch is checked.
All anchors must have a minimum

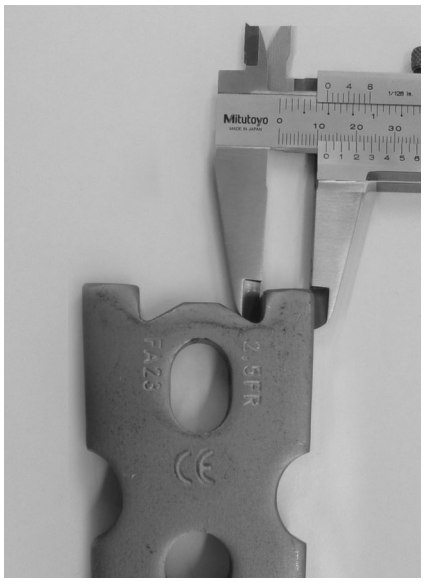


Checking the dimensions of a FRIMEDA TPA

safety factor against steel failure. HALFEN guarantees the whole production process from incoming raw materials right through to delivery of the finished product. This ensures that all HALFEN products are made to the quality that we promise.

**HALFEN understands the responsibility; we will continue to live up to our reputation as supplier of high quality products: Because quality means safety.**

HALFEN



© 2020 HALFEN · TPA 20-E · www.halfen.com

# Material procurement; cut the price not the quality.

***Every manufacturer strives to offer competitively priced products through low production costs, strict cost management and the procurement of low-priced raw materials.***

In some cases, finished products are bought-in as cheaply as possible instead of own-production. Especially when safety is an issue, it soon becomes obvious that the cheap option is often the more expensive.

This applies in particular if there is a serious risk of hidden material defects, e.g. because the composition of a material is not clearly traceable or because there are doubts about a technologically continuous and permanently controllable manufacturing process.

**Non-controlled processes are followed by uncontrollable risks!**
Halfen has decided to source raw material and finished products exclusively from suppliers who can verify and guarantee the stipulated performance and quality.
In our experience the required product safety for transport anchor products is only ensured with regular monitoring of all materials used.

HALFEN Management has therefore decided to only sell and distribute FRIMEDA Lifting anchors manufactured exclusively in HALFEN quality-controlled facilities under the brand name FRIMEDA. HALFEN as a transport anchor supplier with high quality standards reduces your liability risk.

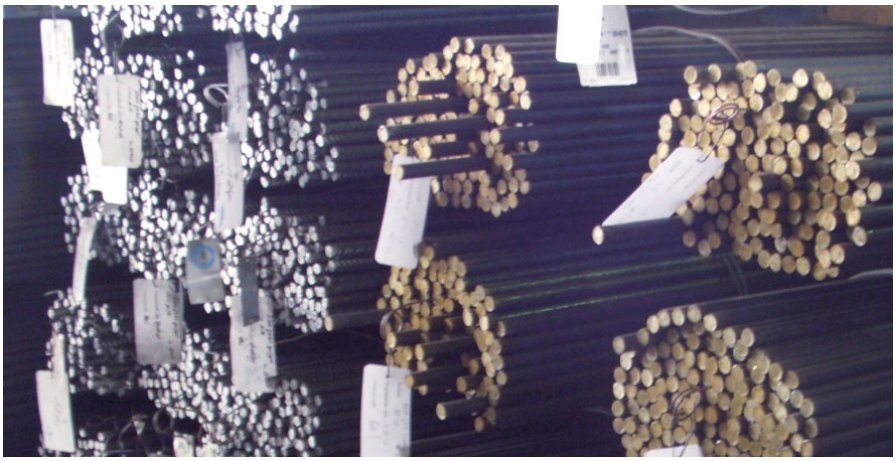
Not the time for experiments

**The importance of quality steel for transport anchors**
Transport anchors are used to lift and move heavy pre-fabricated concrete elements in precast plants and on construction sites. It is inevitable that concrete elements sometimes need to be manoeuvred over critical areas and facilities.
Failure of an anchor here could have devastating consequences. Even if the calculation is correct, this may not be enough if the anchor material used for the anchors just has the required tensile strength. Failure in even one of the other material requirements can quickly turn it into a critical weak point.

Anchors are subject to further stress factors especially from dynamic loads (shock factors). Notch impact strength and elongation at failure are both critical here. This is why it is crucial these requirements are included when selecting the quality of the raw material. Experience is also essential when forging the FRIMEDA Lifting anchor.

The standard of quality for HALFEN Transport anchors is guaranteed by monitoring incoming raw materials, stringent quality-controlled production and final product control; and of course, the ISO 9001 certified HALFEN Quality Management System.

**Summary:**
- The correct metallurgical composition of the steel is the only guarantee of permanent quality e.g. when using anchors at low temperatures and for effects of dynamic shock.

- The accuracy of the forging tools itself is a critical factor; this ensures the transport anchors fit the lifting devices exactly, enabling the calculated loads to be lifted safely.

**HALFEN sources all raw material exclusively from certified suppliers. HALFEN manufactures all FRIMEDA Lifting anchors exclusively in its own facilities in accordance with the most stringent quality control.**

# FRIMEDA LIFTING ANCHOR SYSTEM
## System Overview

### FRIMEDA TPA Anchors

| Type | TPA-FS Spread anchor | TPA-FZ Two-hole anchor | TPA-FA Double shoulder anchor | TPA-FE Single shoulder anchor |
|---|---|---|---|---|
| | 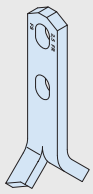 | 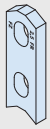 | 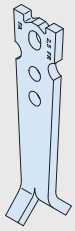 | 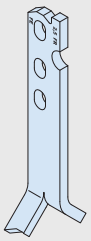 |
| **Application** | Columns, beams, trusses, wall elements, π-slabs | Prestressed concrete trusses, thin-wall elements, low strength concrete (e.g. lightweight concrete) | Thin-wall concrete elements, lifted from a horizontal to a perpendicular position | Thin-wall concrete elements, lifted from a horizontal to a perpendicular position |
| **Parameters** | Component thickness, concrete grade, reinforcement | Component thickness, concrete grade, reinforcement | Component thickness, concrete grade, reinforcement | Component thickness, concrete grade, reinforcement |
| **Load class** | 1,4 – 22,0 | 1,4 – 26,0 | 1,4 – 22,0 | 1,4 – 22,0 |
| **Information** | see page 23–30 | see page 31–33 | see page 34–36 | see page 34–36 |

| Type | TPA-FP Plate anchor | TPA-FG Garage anchor | TPA-FF Flat foot anchor | TPA-FD Double-head (column) anchor |
|---|---|---|---|---|
| | 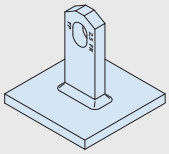 | 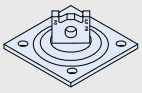 | 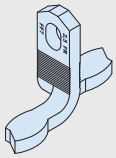 | |
| **Application** | Very thin ceiling slabs with surface-embedded anchors | Precast concrete garages, embedding in floor or ceiling slabs | Ceiling slabs with surface-embedded anchors, pipes | Columns |
| **Parameters** | Component thickness, concrete grade, reinforcement | Component thickness, concrete grade, reinforcement | Component thickness, concrete grade, reinforcement | Component thickness, concrete grade, reinforcement |
| **Load class** | 1,4 – 10,0 | 4,0 | 1,4 – 22,0 | 2,5 – 26,0 |
| **Information** | see page 40 | see page 41 | see page 38–39 | see page 44 |

| Type | TPA-FX Sandwich panel anchor | TPA-FU Universal anchor |
|---|---|---|
| | | 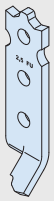 |
| **Application** | Sandwich panels | see TPA-FS, TPA-FZ and TPA-FA |
| **Parameters** | Component thickness, concrete grade, reinforcement | Component thickness, concrete grade, reinforcement |
| **Load class** | 2,5 – 17,0 | 1,25 |
| **Information** | see page 42–43 | see page 37 |


© 2020 HALFEN · TPA 20-E · www.halfen.com

## FRIMEDA LIFTING ANCHOR SYSTEM
### System Overview

**FRIMEDA Attachment links**

| Type | TPA-R1 Ring clutch | TPA-R2 Ring clutch | TPA-R3 Ring clutch |
|---|---|---|---|
| | 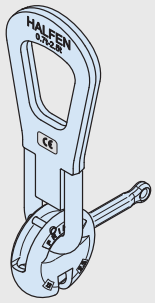 | 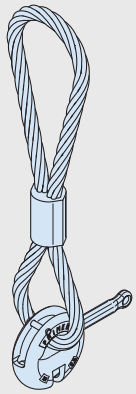 | 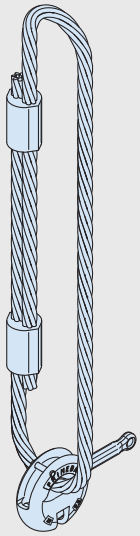 |
| **Type** | With shackle | With wire cable | With wire cable |
| **Application** | For manual release | For manual release | For manual release |
| **Load class** | 2,5 – 26,0 | 1,25 – 10,0 | 26,0 |

| Type | TPA-F1 Ring clutch | TPA-F2 Ring clutch |
|---|---|---|
| | 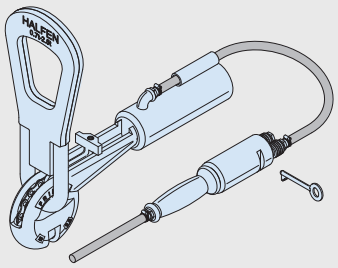 | 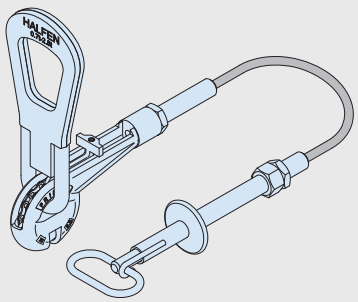 |
| **Type** | With shackle | With shackle |
| **Application** | Pneumatic remote release | Manual remote with bowden cable |
| **Load class** | 2,5 – 22,0 | 2,5 – 22,0 |

## FRIMEDA LIFTING ANCHOR SYSTEM
## System Overview

### FRIMEDA Recess former

| Type | TPA-A-1 | TPA-A-2 | TPA-A-3 |
|---|---|---|---|
| | 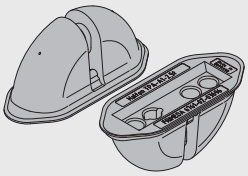 | 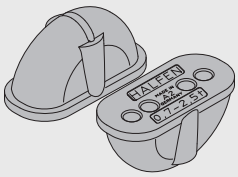 | 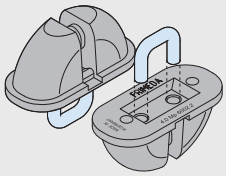 |
| **Material** | Plastic | Rubber | Rubber |
| **Application** | For all anchors except TPA-FU and TPA-FG | For TPA-FS, TPA-FZ, TPA-FD, TPA-FP, TPA-FF Anchors | For TPA-FG Anchor |
| **Installation** | H1, H2, HM Holding plates; S1 or S2 Holding bolts | H3 Holding plate | With locking bracket (included in delivery) |
| **Features** | High durability and good resistance to formwork treatment agents | High durability and good resistance to formwork treatment agents | High durability and good resistance to formwork treatment agents |
| **Load class** | 2,5 – 26,0 | 2,5 – 10,0 | 5,0 |

| Type | TPA-A-4 | TPA-A-7 | TPA-A-8 |
|---|---|---|---|
| | 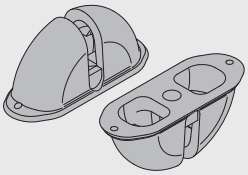 | 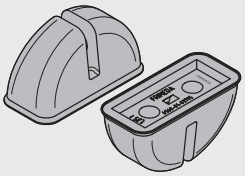 | 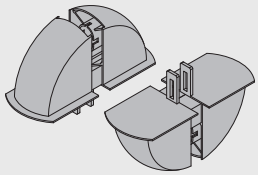 |
| **Material** | Plastic (hard) | Plastic | Plastic |
| **Application** | For all anchors except TPA-FU, TPA-FG | For TPA-FU Universal anchor | For anchors of load class 2,5 |
| **Installation** | S1 Holding bolt | H1 Holding plate, S1 Holding bolt | Two part recess former, pressed together over the anchor head; secured to the formwork with a wedge, pressed between the two fixing tabs |
| **Features** | High durability and good resistance to formwork treatment agents | For especially small recesses, high durability and good resistance to formwork treatment agents | Single-use application |
| **Load class** | 2,5 – 26,0 | 1,25 | 2,5 |

| Type | TPA-A-9 | TPA-AM | TPA-SCFS / -SCFA |
|---|---|---|---|
| | 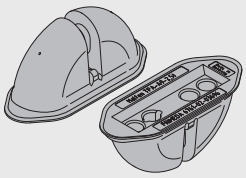 | 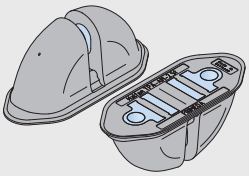 | 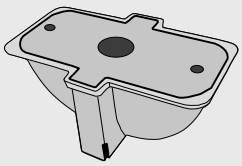 |
| **Material** | Plastic | Plastic | Plastic |
| **Application** | Specially suitable for TPA-FS, TPA-FZ, TPA-FF and TPA-FD, **not suitable for**: TPA-FA, TPA-FE, TPA-FU, TPA-FG and TPA-FX | For all anchors except TPA-FU, TPA-FG | For spread anchors etc. see TPA-A-9 (SCFS)<br>For load class 0072.150 -00004 ①<br>for TPA-FA (SCFA) tilt-up anchor for load class 0072.150 -00002 ②<br>-00003 ③<br>-00005 ④ |
| **Installation** | H1, H2, HM Holding plates; S1 or S2 Holding bolts | Magnetic | |
| **Features** | As for TPA-A1, but for smooth recesses without protruding concrete | High durability and good resistance to formwork treatment agents | Single-use application |
| **Load class** | 2,5 – 26,0 | 2,5 / 5,0 | ① 4,0–5,0 ② 4,0 ③ 5,0 ④ 7,5 |


© 2020 HALFEN · TPA 20-E · www.halfen.com

## FRIMEDA LIFTING ANCHOR SYSTEM
### System Overview

**FRIMEDA Holding plates and holding bolts**

| Type | TPA-H1 | TPA-H2 | TPA-H3 |
|---|---|---|---|
| | 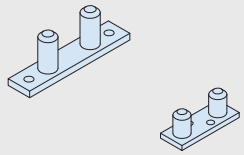 | 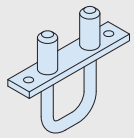 | 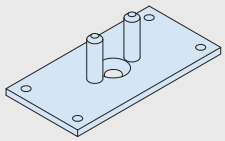 |
| **Application** | For TPA-A1, TPA-A7 and TPA-A9 Recess formers | For TPA-A1 and TPA-A9 Recess formers | For TPA-A2 Recess formers |
| **Installation** | For fixing to formwork | For floating installation | For nailing to formwork |
| **Load class** | 1,25 – 26,0 | 2,5 – 26,0 | 2,5 – 10,0 |

| Type | TPA-HM | TPA-S1 with thread | TPA-S2 Bayonet holding bolt |
|---|---|---|---|
| | 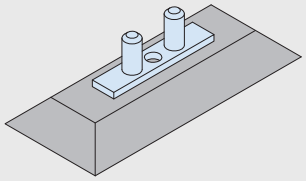 | 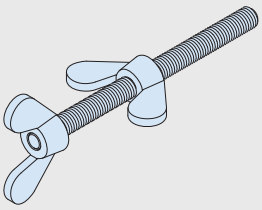 | 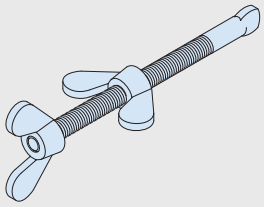 |
| **Application** | For TPA-A1, TPA-A9 Recess formers to load class 10,0 | For TPA-A1, TPA-A7, TPA-A4, TPA-A9, TPA-A2* Recess formers | For TPA-A1, TPA-A9 Recess formers |
| **Installation** | For fixing to steel formwork<br>Feature: magnetic | *TPA-A2 only in combination with TPA-H3 Holding plate | |
| **Load class** | 2,5 – 10,0 | 1,25 – 26,0 | 2,5 – 26,0 |

| Type | TPA-V1 |
|---|---|
| | 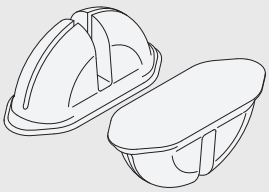 |
| **Application** | To seal recesses for transport, during storage or also as a permanent seal |
| **Features** | Polystyrene |
| **Installation** | Recesses for TPA-A1, TPA-A2, TPA-A3, TPA-A4, TPA-A9 and TPA-AM Anchors |
| **Load class** | 2,5 – 10,0 |

## FRIMEDA LIFTING ANCHOR SYSTEM
# Product Range TPA Anchors

### TPA-FS Spread anchor

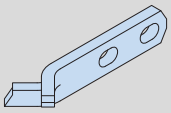

| Load class | Mill finish | | Hot-dip galvanized | |
|---|---|---|---|---|
| | Article number | Order no. 0070.010- | Article number | Order no. 0070.110- |
| 2,5 | TPA-FS 1,4-11 | 00002 | TPA-FS 1,4-11 FV | 00033 |
| | TPA-FS 1,4-16 | 00003 | TPA-FS 1,4-16 FV | 00034 |
| | TPA-FS 2,5-15 | 00007 | TPA-FS 2,5-15 FV | 00038 |
| | TPA-FS 2,5-20 | 00008 | TPA-FS 2,5-20 FV | 00039 |
| | TPA-FS 2,5-25 | 00009 | TPA-FS 2,5-25 FV | 00040 |
| 5,0 | TPA-FS 4,0-18 | 00013 | TPA-FS 4,0-18 FV | 00044 |
| | TPA-FS 4,0-24 | 00014 | TPA-FS 4,0-24 FV | 00045 |
| | TPA-FS 4,0-32 | 00015 | TPA-FS 4,0-32 FV | 00046 |
| | TPA-FS 5,0-18 | 00016 | TPA-FS 5,0-18 FV | 00047 |
| | TPA-FS 5,0-24 | 00017 | TPA-FS 5,0-24 FV | 00048 |
| | TPA-FS 5,0-40 | 00018 | TPA-FS 5,0-40 FV | 00049 |
| 10,0 | TPA-FS 7,5-26 | 00022 | TPA-FS 7,5-26 FV | 00053 |
| | TPA-FS 7,5-30 | 00023 | TPA-FS 7,5-30 FV | 00054 |
| | TPA-FS 7,5-42 | 00024 | TPA-FS 7,5-42 FV | 00055 |
| | TPA-FS 10,0-30 | 00025 | TPA-FS 10,0-30 FV | 00056 |
| | TPA-FS 10,0-37 | 00026 | TPA-FS 10,0-37 FV | 00057 |
| | TPA-FS 10,0-52 | 00027 | TPA-FS 10,0-52 FV | 00058 |
| 26,0 | TPA-FS 14,0-37 | 00028 | TPA-FS 14,0-37 FV | 00059 |
| | TPA-FS 14,0-46 | 00029 | TPA-FS 14,0-46 FV | 00060 |
| | TPA-FS 22,0-50 | 00030 | TPA-FS 22,0-50 FV | 00061 |
| | TPA-FS 22,0-62 | 00031 | TPA-FS 22,0-62 FV | 00062 |

### TPA-FZ Two-hole anchor

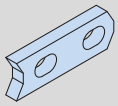

| Load class | Mill finish | | Hot-dip galvanized | |
|---|---|---|---|---|
| | Article number | Order no. 0070.020- | Article number | Order no. 0070.110- |
| 2,5 | TPA-FZ 1,4-9 | 00002 | TPA-FZ 1,4- 9 FV | 00064 |
| | TPA-FZ 2,5-9 | 00004 | TPA-FZ 2,5- 9 FV | 00066 |
| 5,0 | TPA-FZ 4,0-12 | 00006 | TPA-FZ 4,0-12 FV | 00068 |
| | TPA-FZ 5,0-12 | 00007 | TPA-FZ 5,0-12 FV | 00069 |
| 10,0 | TPA-FZ 7,5-16 | 00009 | TPA-FZ 7,5-16 FV | 00071 |
| | TPA-FZ 10,0-17 | 00010 | TPA-FZ 10,0-17 FV | 00072 |
| 26,0 | TPA-FZ 14,0-24 | 00011 | TPA-FZ 14,0-24 FV | 00073 |
| | TPA-FZ 22,0-30 | 00013 | TPA-FZ 22,0-30 FV | 00075 |
| | TPA-FZ 26,0-30 | 00012 | TPA-FZ 26,0-30 FV | 00074 |

### TPA-FA Single shoulder erection anchor (tilt-up)

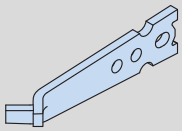
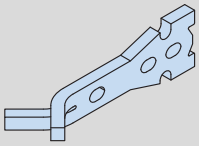

| Load class | Mill finish | | Hot-dip galvanized | |
|---|---|---|---|---|
| | Article number | Order no. 0070.030- | Article number | Order no. 0070.110- |
| 2,5 | TPA-FA 1,4-20 | 00001 | TPA-FA 1,4-20 FV | 00001 |
| | TPA-FA 2,5-23 | 00002 | TPA-FA 2,5-23 FV | 00002 |
| 5,0 | TPA-FA 4,0-27 | 00003 | TPA-FA 4,0-27 FV | 00003 |
| | TPA-FA 5,0-29 | 00004 | TPA-FA 5,0-29 FV | 00004 |
| 10,0 | TPA-FA 7,5-32 | 00005 | TPA-FA 7,5-32 FV | 00005 |
| | TPA-FA 10,0-39 | 00006 | TPA-FA 10,0-39 FV | 00006 |
| 26,0 | TPA-FA 12,5-50 | 00007 | TPA-FA 12,5-50 FV | 00007 |
| | TPA-FA 17,0-50 | 00008 | TPA-FA 17,0-50 FV | 00008 |
| | TPA-FA 22,0-50 | 00009 | TPA-FA 22,0-50 FV | 00009 |
| 2,5 | TPA-FA 2,5-23 A4 | 00010 | Stainless steel A4 | |
| 5,0 | TPA-FA 4,0-27 A4 | 00012 | Stainless steel A4 | |
| | TPA-FA 5,0-29 A4 | 00011 | Stainless steel A4 | |

### TPA-FE Single shoulder erection anchor (tilt-up)

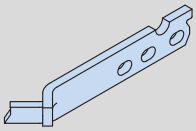
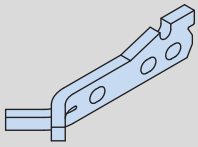

| Load class | Mill finish | | Hot-dip galvanized | |
|---|---|---|---|---|
| | Article number | Order no. 0070.040- | Article number | Order no. 0070.110- |
| 2,5 | TPA-FE 1,4-20 | 00001 | TPA-FE 1,4-20 FV | 00010 |
| | TPA-FE 2,5-23 | 00002 | TPA-FE 2,5-23 FV | 00011 |
| 5,0 | TPA-FE 4,0-27 | 00003 | TPA-FE 4,0-27 FV | 00012 |
| | TPA-FE 5,0-29 | 00004 | TPA-FE 5,0-29 FV | 00013 |
| 10,0 | TPA-FE 7,5-32 | 00005 | TPA-FE 7,5-32 FV | 00014 |
| | TPA-FE 10,0-39 | 00006 | TPA-FE 10,0-39 FV | 00015 |
| 26,0 | TPA-FE 12,5-50 | 00007 | TPA-FE 12,5-50 FV | 00016 |
| | TPA-FE 17,0-50 | 00008 | TPA-FE 17,0-50 FV | 00017 |
| | TPA-FE 22,0-50 | 00009 | TPA-FE 22,0-50 FV | 00018 |

### TPA-FU Universal anchor

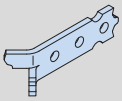

| Load class | Article number | Order no. 0070.100- | Type |
|---|---|---|---|
| 1,25 | TPA-FU 1,25-12 | 00001 | Mill finish |
| 1,25 | TPA-FU 1,25-12 FV | 00003 | Hot-dip galvanized |
| 1,25 | TPA-FU 1,25-12 A2 | 00002 | Stainless steel A2 (W 1.4301) |


© 2020 HALFEN · TPA 20-E · www.halfen.com

# FRIMEDA LIFTING ANCHOR SYSTEM
## Product Range TPA Anchors / Ring Clutches

### TPA-FF Flat foot anchor

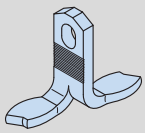
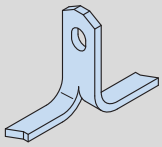

| Load class | Mill finish | | Hot-dip galvanized | |
|---|---|---|---|---|
| | Article number | Order no. 0070.070- | Article number | Order no. 0070.110- |
| 2,5 | TPA-FF 1,4-6 | 00002 | TPA-FF 1,4- 6 FV | 00020 |
| | TPA-FF 2,5-7 | 00004 | TPA-FF 2,5- 7 FV | 00022 |
| 5,0 | TPA-FF 4,0-11 | 00006 | TPA-FF 4,0-11 FV | 00024 |
| | TPA-FF 5,0-12 | 00007 | TPA-FF 5,0-12 FV | 00025 |
| 10,0 | TPA-FF 7,5-17 | 00009 | TPA-FF 7,5-17 FV | 00027 |
| | TPA-FF 10,0-20 | 00010 | TPA-FF 10,0-20 FV | 00028 |
| 26,0 | TPA-FF 12,5-22 | 00011 | TPA-FF 12,5-22 FV | 00029 |
| | TPA-FF 17,0-27 | 00012 | TPA-FF 17,0-27 FV | 00030 |
| | TPA-FF 22,0-31 | 00013 | TPA-FF 22,0-31 FV | 00031 |

### TPA-FP Plate anchor

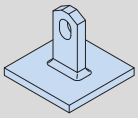

| Load class | Mill finish | | Hot-dip galvanized | |
|---|---|---|---|---|
| | Article number | Order no. 0070.050- | Article number | Order no. 0070.110- |
| 2,5 | TPA-FP 1,4- 5 | 00001 | TPA-FP 1,4- 5 FV | 00076 |
| | TPA-FP 2,5- 8 | 00002 | TPA-FP 2,5- 8 FV | 00077 |
| 5,0 | TPA-FP 5,0-12 | 00003 | TPA-FP 5,0-12 FV | 00078 |
| 10,0 | TPA-FP 10,0-16 | 00004 | TPA-FP 10,0-16 FV | 00079 |

### TPA-FG Garage anchor

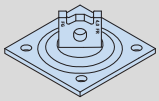

| Load class | Mill finish | | Hot-dip galvanized | |
|---|---|---|---|---|
| | Article number | Order no. 0070.060- | Article number | Order no. 0070.110- |
| 5,0 | TPA-FG 4,0 - 7 | 00001 | - | - |

### TPA-FX Sandwich panel anchor

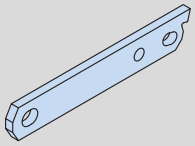

| Load class | Mill finish | | Hot-dip galvanized | |
|---|---|---|---|---|
| | Article number | Order no. 0070.090- | Article number | Order no. 0070.090- |
| 2,5 | TPA-FX 2,5-25 | 00001 | TPA-FX 2,5-25 FV | 00006 |
| 5,0 | TPA-FX 5,0-30 | 00002 | TPA-FX 5,0-30 FV | 00007 |
| 10,0 | TPA-FX 7,5-35 | 00003 | TPA-FX 7,5-35 FV | 00008 |
| | TPA-FX 10,0-35 | 00004 | TPA-FX 10,0-35 FV | 00009 |
| 26,0 | TPA-FX 17,0-40 | 00005 | TPA-FX 17,0-40 FV | 00010 |

### TPA-FD Double-head (column) anchor

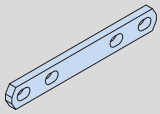

| Load class | Mill finish | | Hot-dip galvanized | |
|---|---|---|---|---|
| | Article number | Order no. 0070.089- | Article number | Order no. 0070.089- |
| 2,5 | TPA-FD 2,5 - L-SK | 00001② | TPA-FD 2,5 - L-SK FV | 00002② |
| 5,0 | TPA-FD 5,0 - L-SK | 00001② | TPA-FD 5,0 - L-SK FV | 00002② |
| 10,0 | TPA-FD 7,5 - L-SK | 00001② | TPA-FD 7,5 - L-SK FV | 00002② |
| | TPA-FD 10,0 - L-SK | 00001② | TPA-FD 10,0 - L-SK FV | 00002② |
| 26,0 | TPA-FD 12,5 - L-SK | 00001② | TPA-FD 12,5 - L-SK FV | 00002② |
| | TPA-FD 17,0 - L-SK | 00001② | TPA-FD 17,0 - L-SK FV | 00002② |
| | TPA-FD 22,0 - L-SK | 00001② | TPA-FD 22,0 - L-SK FV | 00002② |
| | TPA-FD 26,0 - L-SK | 00001② | TPA-FD 26,0 - L-SK FV | 00002② |

② specify anchor length (L) when ordering

### FRIMEDA Ring clutches / Ring clutches with remote control release / Replacement part

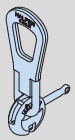
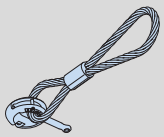
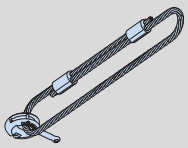
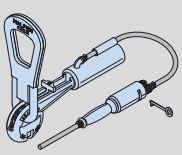
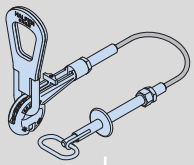

zi = galvanized

| Load class | TPA-R1 | | TPA-R2 | | TPA-R3 | | TPA-F1 | | TPA-F2 | | TPA-R-E1 | |
|---|---|---|---|---|---|---|---|---|---|---|---|---|
| | Article number | Order no. 0071.010- | Article number | Order no. 0071.020- | Article number | Order no. 0071.020- | Article number | Order no. 0071.030- | Article number | Order no. 0071.040- | Article number | Order no. 0071.060- |
| 1,25 | - | - | TPA-R2 1,25 | 00001 | – | – | - | page 54 | - | page 56 | TPA-R-E1 1,25-zi | 00001 |
| 2,5 | TPA-R1 2,5 | 00001 | TPA-R2 2,5 | 00002 | – | – | TPA-F1 2,5 | | TPA-F2 2,5 | | TPA-R-E1 2,5-zi | 00002 |
| 5,0 | TPA-R1 5,0 | 00002 | TPA-R2 5,0 | 00003 | – | – | TPA-F1 5,0 | | TPA-F2 5,0 | | TPA-R-E1 5,0-zi | 00003 |
| 10,0 | TPA-R1 10,0 | 00006 | TPA-R2 10,0 | 00006 | – | – | TPA-F1 10,0 | | TPA-F2 10,0 | | TPA-R-E1 10,0 | 00004 |
| 22,0 | – | – | – | – | – | – | TPA-F1 22,0 | | TPA-F2 22,0 | | – | – |
| 26,0 | TPA-R1 26,0 | 00007 | – | – | TPA-R3 26,0 | 00007 | – | | – | | TPA-R-E1 26,0 | 00005 |

## FRIMEDA LIFTING ANCHOR SYSTEM
# Product Range TPA Recess Formers / Accessories

**FRIMEDA Recess formers**

| Load class | TPA-A1 | | TPA-A2 | | TPA-A3 | | TPA-A4 | | TPA-A7 | |
|---|---|---|---|---|---|---|---|---|---|---|
| | 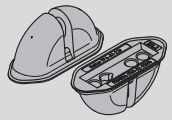 | | 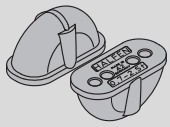 | | 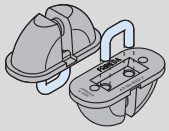 | | 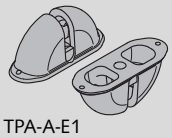 incl. TPA-A-E1 | | 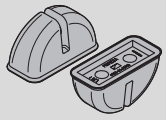 | |
| | Article number | Order no. 0072.010- | Article number | Order no. 0072.020- | Article number | Order no. 0072.030- | Article number | Order no. 0072.040- | Article number | Order no. 0072.070- |
| 1,25 | - | - | - | - | - | - | - | - | TPA-A7 1,25 | 00001 |
| 2,5 | TPA-A1 2,5 | 00001 | TPA-A2 2,5 | 00001 | - | - | TPA-A4 2,5 | 00001 | - | - |
| 5,0 | TPA-A1 5,0 | 00002 | TPA-A2 5,0 | 00002 | TPA-A3 5,0 | 00001 | TPA-A4 5,0 | 00002 | - | - |
| 10,0 | TPA-A1 10,0 | 00003 | TPA-A2 10,0 | 00003 | - | - | TPA-A4 10,0 | 00003 | - | - |
| 26,0 | TPA-A1 26,0 | 00004 | - | - | - | - | TPA-A4 26,0 | 00004 | - | - |

**FRIMEDA Recess formers**

| Load class | TPA-A8 | | TPA-A9 | | TPA-AM | | TPA-SCFS | | TPA-SCFA | |
|---|---|---|---|---|---|---|---|---|---|---|
| | 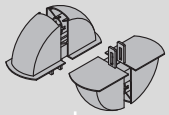 | | 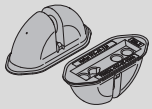 | | 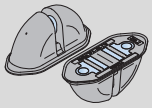 | | 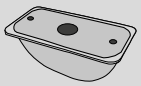 | | 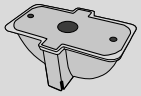 | |
| | Article number | Order no. 0072.080- | Article number | Order no. 0072.090- | Article number | Order no. 0072.100- | Article number | Order no. 0072.150- | Article number | Order no. 0072.150- |
| 1,25 | - | - | - | - | - | - | - | - | - | - |
| 2,5 | TPA-A8 2,5 | 00001 | TPA-A9 2,5 | 00001 | TPA-AM 2,5 | 00001 | - | - | - | - |
| 5,0 | - | - | TPA-A9 5,0 | 00002 | TPA-AM 5,0 | 00002 | TPA-SCFS 5,0 | 00004 | TPA-SCFA 4,0/5,0 | 00002/00003 |
| 10,0 | - | - | TPA-A9 10,0 | 00003 | - | - | - | - | TPA-SCFA 7,5 | 00005 |
| 26,0 | - | - | TPA-A9 26,0 | 00004 | - | - | - | - | - | - |

**Recess filler**

| Load class | TPA-V1 | |
|---|---|---|
| | 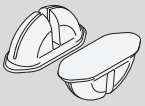 | |
| | Article number | Order no. 0073.080- |
| 1,25 | - | - |
| 2,5 | TPA-V1 2,5 | 00001 |
| 5,0 | TPA-V1 5,0 | 00002 |
| 10,0 | TPA-V1 10,0 | 00003 |
| 26,0 | - | - |

**Accessories**

| Load class | TPA-A-Z1 | | TPA-A-E1 | |
|---|---|---|---|---|
| | 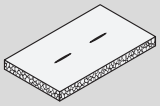 | | | |
| | Article number | Order no. 0072.120- | Article number | Order no. 0072.120- |
| 1,25 | - | - | - | - |
| 2,5 | TPA-A-Z1 2,5 | 00006 | TPA-A-E1 2,5 | 00002 |
| 5,0 | TPA-A-Z1 5,0 | 00007 | TPA-A-E1 5,0 | 00003 |
| 10,0 | TPA-A-Z1 10,0 | 00008 | TPA-A-E1 10,0 | 00004 |
| 26,0 | TPA-A-Z1 26,0 | 00009 | TPA-A-E1 26,0 | 00005 |

**FRIMEDA Holding plates**

| Load class | TPA-H1 | | TPA-H2 | | TPA-H3 | | TPA-HM | |
|---|---|---|---|---|---|---|---|---|
| | 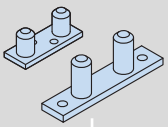 | | 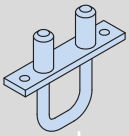 | | 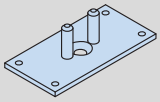 | | 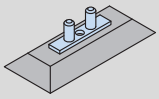 | |
| | Article number | Order no. 0073.010- | Article number | Order no. 0073.020- | Article number | Order no. 0073.030- | Article number | Order no. 0073.050- |
| 1,25 | TPA-H1 1,25 | 00001 | - | - | - | - | - | - |
| 2,5 | TPA-H1 2,5 | 00002 | TPA-H2 2,5 | 00001 | TPA-H3 2,5 | 00001 | TPA-HM 2,5 | 00001 |
| 5,0 | TPA-H1 5,0 | 00003 | TPA-H2 5,0 | 00002 | TPA-H3 5,0 | 00002 | TPA-HM 5,0 | 00002 |
| 10,0 | TPA-H1 10,0 | 00004 | TPA-H2 10,0 | 00003 | TPA-H3 10,0 | 00003 | TPA-HM 10,0 | 00003 |
| 26,0 | TPA-H1 26,0 | 00005 | TPA-H2 26,0 | 00004 | - | - | - | - |

**FRIMEDA Retaining bolts**

| Load class | TPA-S1 | | TPA-S2 | |
|---|---|---|---|---|
| | 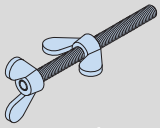 | | 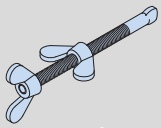 | |
| | Article number | Order no. 0073.060- | Article number | Order no. 0073.070- |
| 1,25 | | | - | - |
| 2,5 | TPA-S1-M 8 | 00001 | TPA-S2-M 8 | 00001 |
| 5,0 | | | | |
| 10,0 | TPA-S1-M12 | 00002 | TPA-S2-M12 | 00002 |
| 26,0 | TPA-S1-M16 | 00003 | | |



© 2020 HALFEN · TPA 20-E · www.halfen.com

# FRIMEDA LIFTING ANCHOR SYSTEM
## Installation and Application

### Safety regulations

A transport anchor system consists of the permanently cast-in transport anchor and the temporarily connected lifting equipment.
The basic principles for dimensioning and application of transport anchors can be found in the **VDI/BV-BS guideline 6205**; the guideline describes current technology in lifting.

The regulations require the following safety factors:

| Failure safety factors | |
|---|---|
| Steel failure of anchors: | $\gamma = 3.0$ |
| Concrete failure*: | $\gamma = 2.5$ |
| Failure in the lifting-link: | $\gamma = 4.0$ |

* A safety factor of $\gamma = 2.1$ can be assumed for transport anchors in precast elements installed in a continuous supervised factory environment.

For safety reasons, these installation and application instructions for FRIMEDA Lifting systems must always be available at the place of use.

The installation and application instructions must be readily available on site, in the precast plant or on the construction site. The plant or site manager must ensure that the operator has read and understood the installation and application instructions for this system.

### Identification

All DEHA Lifting and hoisting equipment are clearly and visibly marked. According to VDI/BV-BS guideline 6205 safety regulations for lifting anchors and systems, identification marking of all lifting elements must remain clearly visible, even after installation.

### Identification on the anchor

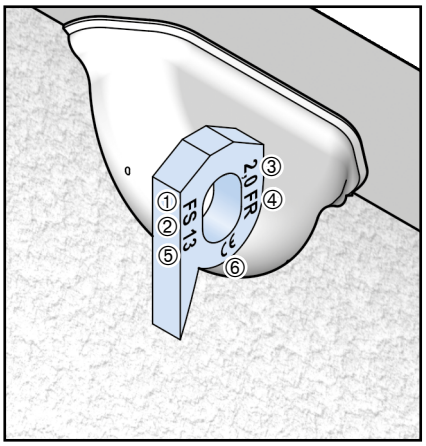


① **System type**
② **Anchor type**
S = Spread anchor
Z = Two-hole anchor
P = Plate anchor
A = Erection anchor (tilt-up)
E = One-sided erection anchor (tilt-up)
G = Garage anchor
F = Flat foot anchor
D = Double-head (column) anchor
X = Sandwich panel anchor
U = Universal anchor
③ **Load class**
④ **Manufacturer's identification**
**FR = FRIMEDA**
⑤ **Anchor length**
⑥ **CE marking**

### Installation and application

The following technical specifications and requirements must be observed when installing FRIMEDA Lifting anchor systems.

### Damaged anchor

Transport anchors that are incorrectly installed, defective or damaged (for example corrosion damage or with visible deformities) must not be used for lifting.

### Stainless steel transport anchors

Transport anchors may not be used repeatedly. Multiple lifting in the normal sequence of transporting and loading through to final installation is not defined as repeated use. Transport anchors for permanent use in crane ballast etc. must be made in accordance with EN 1993-1-4.

### Quality control

All required in-house quality control has been observed for transport anchors and systems in accordance with ISO 9001.

## FRIMEDA LIFTING ANCHOR SYSTEM
## Installation and Application

### Criteria for anchor selection

Maximum load capacities, edge distances and installation values can be found in the respective tables. Irrespective of the selected anchor-type (selected according to the load acting on the anchor) the following factors must be taken into account for calculation:

- weight of the precast element
- number of anchors
- anchor layout
- number of load bearing anchors
- spread angle in the hoist
- anchor diagonal pull properties
- dynamic loads
- adhesion to the formwork

Install an erection (tilt-up) anchor and ensure sufficient reinforcement; if slabs are cast in the horizontal and subsequently lifted upright without a tilting-table.

### Number of anchors

The number of anchors determines the type of hoist that needs to be used. A hoist with more than two cables is statically indeterminate if the anchors are aligned along a single axis. Hoists with more than three cables are deemed statically indeterminate if measures are not taken to ensure the load is distributed amongst all anchors (for example; with a spreader beam etc.).

### Installation and application

FRIMEDA Lifting anchor systems should only be installed when the following technical specifications and requirements have been determined:

- load capacity
- edge spacing
- concrete grade
- load direction
- additional reinforcement

### Load capacity

The load capacity of the anchor depends on:

- concrete compression strength $f_{ci}$ at time of lift (cube-test 15 × 15 × 15 cm)
- anchorage length of the anchor
- edge and axial anchor-spacing
- load direction
- reinforcement layout

### Calculating the tension load

The tension force Z in the anchor is generally calculated using the following formulae:

**Load case: removing the formwork**

$F_Z = F_G \times z \times \xi / n$

or

$F_Z = (F_G + q_{adh} \times A_f) \times z / n$

**Load case: transport**

$F_Z = F_G \times z \times \psi_{dyn} / n$

**Abbreviations:**

$F_Z$ = tension force on the anchor [kN]

$F_G$ = element weight [kN] (according to EN 1991-1-1 specific weight of $\gamma = 25$ kN/m$^3$)

$A_f$ = contact surface between the concrete and formwork [m$^2$]

n = number of load-bearing anchors

z = spread angle factor

$\xi$ = formwork adhesion factor

$\psi_{dyn}$ = dynamic factor

$q_{adh}$ = base value for formwork adhesion

$F_{adh}$ = effective load caused by formwork adhesion [kN]



© 2020 HALFEN · TPA 20-E · www.halfen.com

# FRIMEDA LIFTING ANCHOR SYSTEM
## Installation and Application

### Loads at the anchor — Dead weight

**Element weight is defined as:** Volume of the element × specific weight of the concrete

**Increase factors:**

**1. Spread angle**

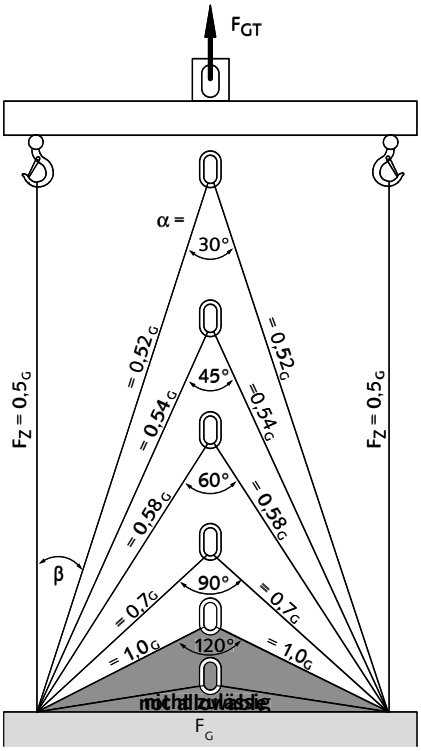


| Spread angle factors | | |
|---|---|---|
| Cable angle β | Spread angle α | Factor z |
| 0° | - | 1.00 |
| 7.5° | 15° | 1.01 |
| 15° | 30° | 1.04 |
| 22.5° | 45° | 1.08 |
| 30° | 60° | 1.16 |
| 37.5° | 75° | 1.26 |
| 45° | 90° | 1.41 |
| 52.5° | 105° | 1.64 |
| 60.0° | 120.0° | 2.00 |

**2. Dynamic loads**

The effect of dynamic loading depends mainly on the lifting equipment between the crane and the load lifting head.

**Cables made of steel or synthetic fibre** have a damping effect. With increasing cable length the damping effect is increased.

However **short chains** have an un-favourable effect. The forces acting on the lifting anchors are calculated taking the shock factor $\psi_{dyn}$ into account.

| Dynamic factors $\psi_{dyn}$* | |
|---|---|
| Lifting unit | shock factor $\psi_{dyn}$* |
| Stationary crane, swing-boom crane, rail crane | 1.3 |
| Lifting and moving on level terrain | 2.5 |
| Lifting and moving on uneven terrain | ≥ 4.00 |

*If other values from reliable tests or through proven experience are available for $\psi_{dyn}$ then these may be used for calculation.

For other non-listed transport and lifting situations the coefficient $\psi_{dyn}$ is defined through tests or empirical values.

**3. Non-symmetrical anchor layout**

The load in each anchor is calculated using bar statics if the anchors are not installed symmetrically to the load's centre of gravity.

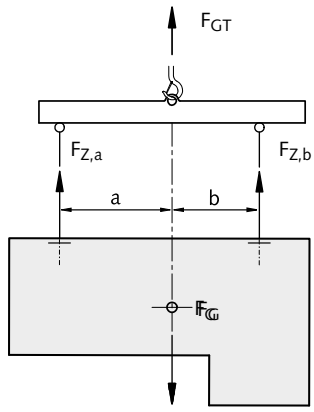


**Figure:** *Uneven loading of the anchor caused by non-symmetrical installed anchors in respect to the centre of gravity of the load.*

The load's centre of gravity will always stabilise verticality under the crane hook. Load distribution in non-symmetrical installed anchors when using a spreader beam is calculated as below:

$$F_{Z,a} = F_G \times b / (a + b)$$

$$F_{Z,b} = F_G \times a / (a + b)$$

**Note:** To avoid precast elements hanging at a slant when being moved, the hook in the spreader beam should be directly above the centre of gravity.
The transport anchors should be installed symmetrically to the centre of gravity, when lifting elements without a spreader beam.

## Total load on the anchor — Formwork adhesion

**Adhesion:**

**1. Adhesion forces**
Depending on the material used for the formwork the adhesion between formwork and concrete can vary.

The following table can be used as a reference:

| Adhesion to the formwork | |
|---|---|
| Lubricated steel formwork | $q_{adh} \geq 1$ kN/m² |
| Painted timber formwork | $q_{adh} \geq 2$ kN/m² |
| Rough formwork | $q_{adh} \geq 3$ kN/m² |

The adhesion value ($F_{adh}$) for the formwork is calculated with the following equation:

$$F_{adh} = q_{adh} \times A_f \text{ ①}$$

① Surface of the prefabricated concrete element in contact with the formwork prior to lifting.

**2. Increased adhesion**
Increased adhesion to the formwork must be assumed for π-panel and coffered ceiling slabs.

To simplify calculation, a multiple of the mass is used:

| Increased adhesion to the formwork | |
|---|---|
| π - panel | $\xi = 2$ |
| Ribbed panel | $\xi = 3$ |
| Waffled panel | $\xi = 4$ |

Substantial load increase can also be encountered when components are lifted parallel or near parallel to parts of the formwork. This applies to ribbed slabs and coffered ceiling slabs and can also apply to vertically cast columns and slabs.

**3. Striking the formwork**
Adhesion to the formwork should be minimised before lifting by removing as many parts of the formwork as possible.

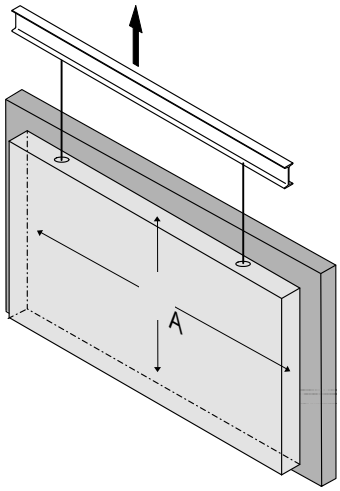


To reduce forces caused by adhesion and friction — especially when lifting from tilt-up tables — we recommend removing the framework from the concrete elements before lifting (e. g. short vibration of the tilt-up table or using wedges).

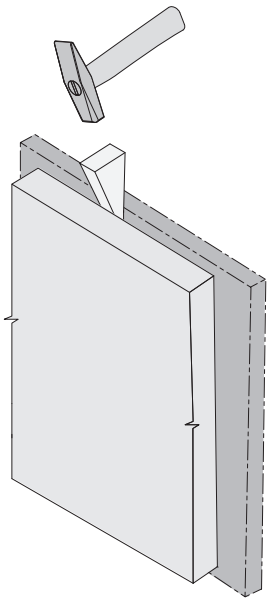


© 2020 HALFEN · TPA 20-E · www.halfen.com

## FRIMEDA LIFTING ANCHOR SYSTEM
## Installation and Application

### Tensile loads at the anchors

**Axial load β: 0° to 10°**

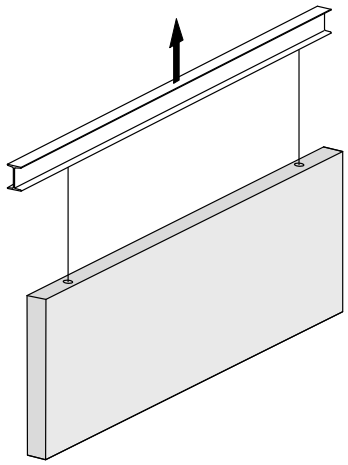

**Diagonal load β: 10° to 60° ①**

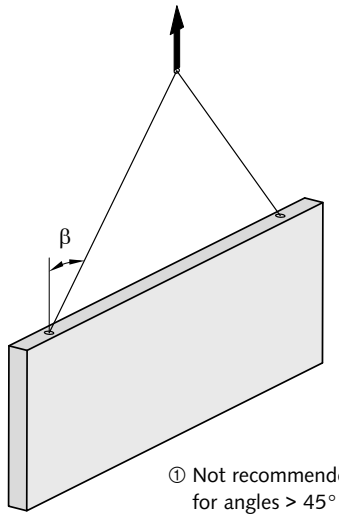


① Not recommended for angles > 45°

**Tilt-up γ: 90°**

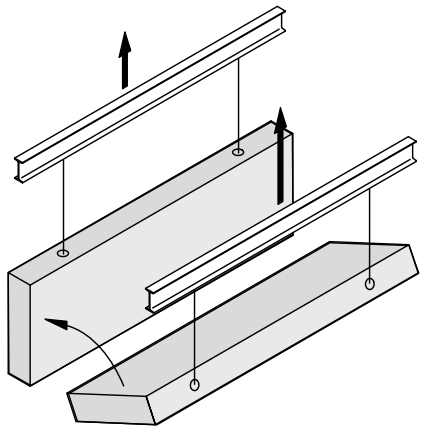

Additional shear reinforcement can be omitted when using a tilting table and a load angle of γ < 15°.

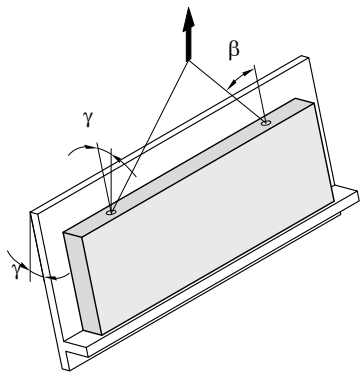


### Static system

**Positioning of anchors in walls**

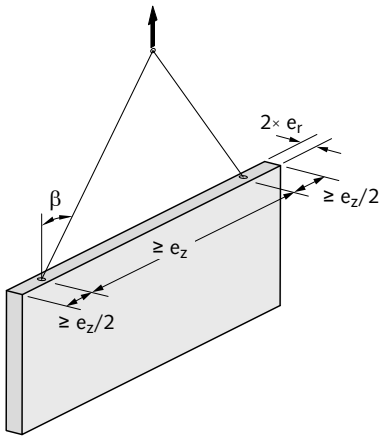


Assumed number of load bearing anchors: n = 2

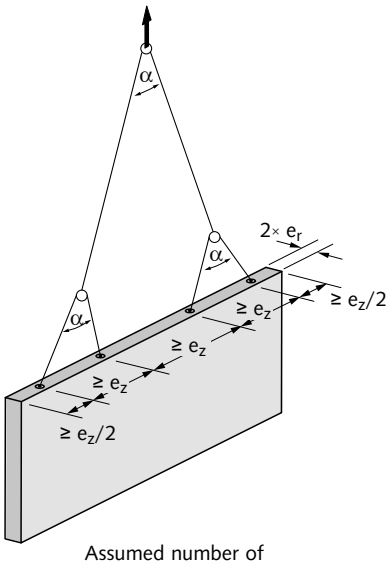


Assumed number of load bearing anchors: n = 4

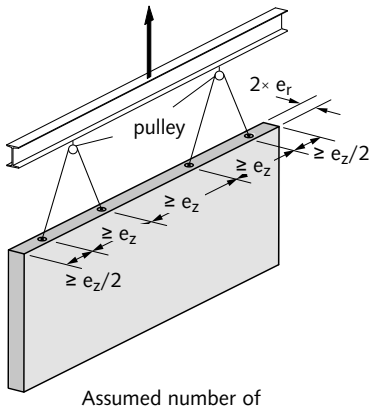


Assumed number of load bearing anchors: n = 4

## FRIMEDA LIFTING ANCHOR SYSTEM
## Installation and Application

### Statical systems

**Layout of the anchors in slabs**

A beam with more than two suspension points or a panel with more than three suspension points are assumed to be statically indeterminate even if the anchors are arranged symmetrically to the centre of load.
Due to unavoidable tolerances in suspension systems and in the position of the anchors, it can never be determined whether the load is distributed equally amongst all anchors.

Using tolerance-compensating suspension systems permit exact load distribution (e.g. articulated lifting beam combinations, multiple slings with compensating rig, etc.).
This type of system should only be used by experienced specialists; also bear in mind that this system must be used in the precast plant and on the construction site. If in doubt assume only two anchors are load bearing (BGR 500 Ch. 2.8 / section 3.5.3).

The use of two anchors is recommended for beams and upright panels, and four anchors installed symmetrically
to the load centre is recommended for horizontal slabs. In both instances, it can be assumed that two anchors will be bearing equal loads.

**Examples**

Using three anchors ensures a static determinate system.

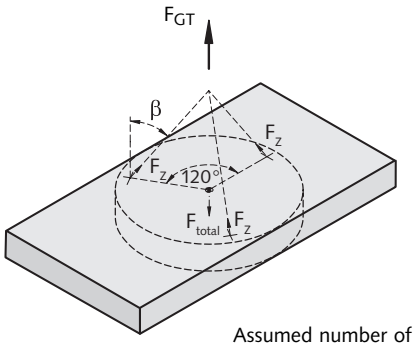


Assumed number of load-bearing anchors: n = 3

With four independent cable runs or two single diagonal cables, only two anchors can be assumed to be load-bearing.

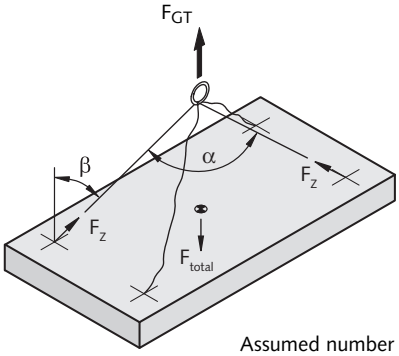


Assumed number of load-bearing anchors: n = 2

Perfect static weight distribution is achieved by using a spreader beam and two symmetrical pairs of anchors.

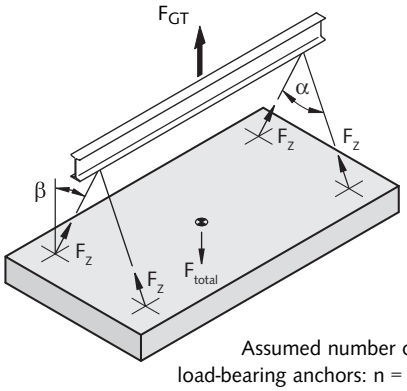


Assumed number of load-bearing anchors: n = 4

As the anchors are arranged asymmetrically, only two anchors can be assumed to be load-bearing.

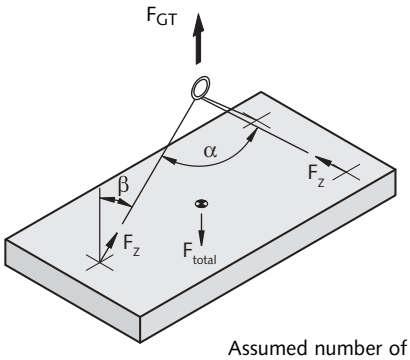


Assumed number of load-bearing anchors: n = 2

The system with compensating rig makes it possible to distribute the load evenly over 4 anchors.

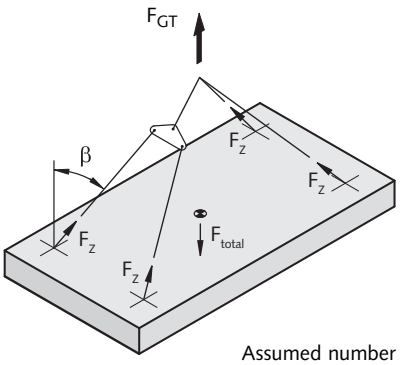


Assumed number of load-bearing anchors: n = 4

Perfect static weight distribution can be achieved using a spreader-beam, which avoids diagonal pull.

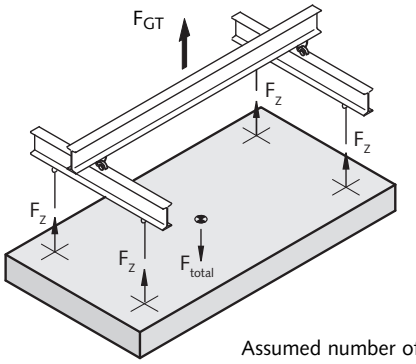


Assumed number of load-bearing anchors: n = 4


© 2020 HALFEN · TPA 20-E · www.halfen.com

## FRIMEDA LIFTING ANCHOR SYSTEM
## Installation and Application

### Anchor installation and application – Static system

Transport anchors are made out of killed steel with a high notch toughness, which retains its safe load capacity under shock load in temperatures as low as minus 20°C. Transport anchor production is ISO 9001 certified and is subjected to continual monitoring.

The FRIMEDA Lifting anchor is cast in with the recess former attached. After the concrete has set, the recess former is removed. The ring clutch can then be attached to the transport anchor.

The connection meets all work regulation safety requirements; the transport anchor is in a recess so there are no dangerous protruding elements in the finished precast elements.

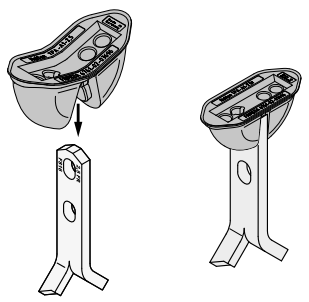

Installation of the A1 Recess former

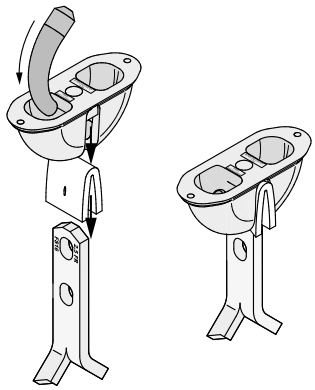

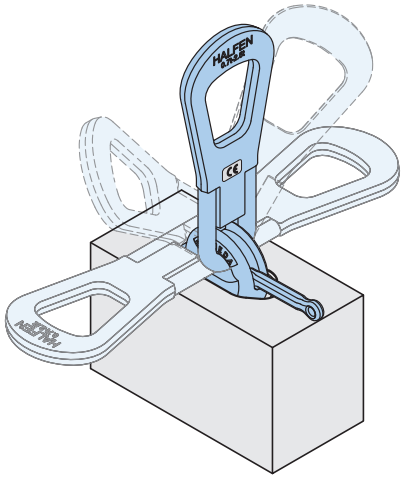

Cast-in anchor: multi-directional lift

| Combining accessories and anchors | |
|---|---|
| Ring clutch load class | Anchor load class |
| 1,25 | 1,25 |
| 2,5 | 1,4<br>2,5 |
| 5,0 | 3,0①<br>4,0<br>5,0 |
| 10,0 | 7,5<br>10,0 |
| 26,0 | 12,5<br>14,0<br>17,0<br>22,0<br>26,0 |

① Stock clearance; load class 3 available only while stocks last

The HALFEN product range with its wide selection of transport anchors in various load classes and lengths guarantees that for nearly every shape of reinforced concrete precast element the required technically, correct solution is available and remains cost-efficient – for conventional building projects (beams, ceiling slabs, trusses, columns and stairs); and also for utility and excavation projects (pipes and shafts).

**Advantages:**
Safety is the top priority when moving or transporting precast elements. The cast-in forged steel spherical head transport anchors have large safety factors against steel and concrete failure. The load class is clearly marked on all anchors, on some anchors the length is also marked.

The comprehensive product range including anchors and numerous system accessories allows the most economical solution for every precast element; regardless of shape.

- There is no risk of mix-ups in a particular load class.
- The lifting link (the ring clutch) is wear resistant even in the toughest construction situations.
- The system ensures fast anchor installation in precast elements and due to the special anchor shape the crane hook is connected within seconds to the precast element.
- Anchor installation in the precast plant using the system accessories is remarkably easy.
- Engaging and disengaging the universal lifting link — fitted to a crane-cable — with the transport anchor is easy and can be done using one hand.
- Thanks to efficient production methods and its proven design FRIMEDA Lifting anchors are exceptionally economical.

## FRIMEDA LIFTING ANCHOR SYSTEM
# Basic Principles for Load Capacities

### Spread anchors for large surface precast elements

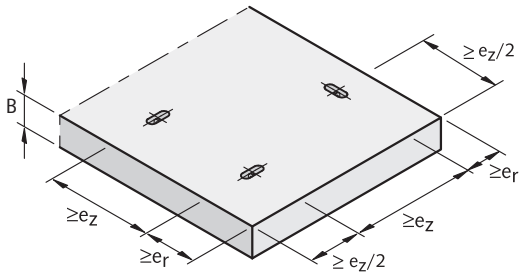


### Spread anchors for thin-wall precast unit

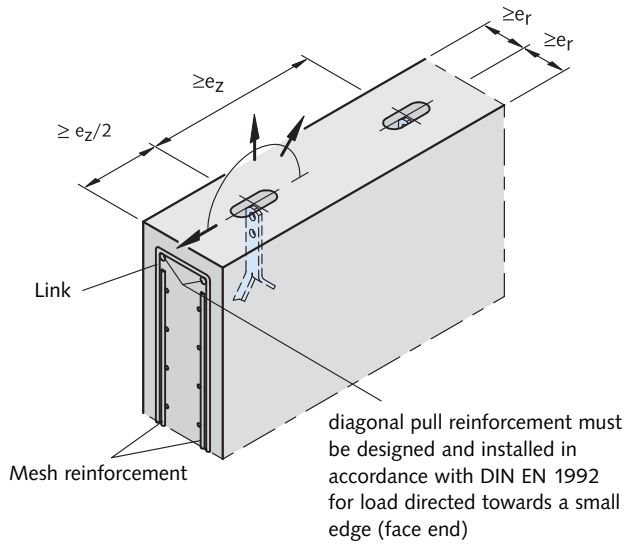


**Minimum thickness of precast elements**

**B = l + k + c**

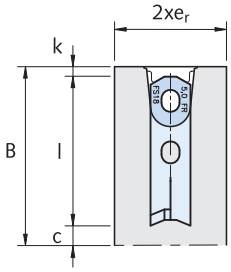


l = Anchor length
k = Cover; anchor head
c = Concrete cover acc. to DIN EN 1992

### Basic principles of the load capacity tables

The values for loads and edge distances in the following tables have been calculated in accordance with the applicable regulations and a calculation process modified for anchors or established through tests.

| Symbols used in this cataloge | |
|---|---|
| **Load direction** | **Symbol** |
| Central pull in direction of anchor axis | |
| Transverse pull perpendicular to the anchor surface | |
| Transverse pull parallel to the anchor surface | |
| Diagonal pull, transverse component perpendicular to the anchor surface | |
| Diagonal pull, transverse component parallel to the anchor surface | |

### Anchor arrangement for thin-wall elements

Spread, tilt-up and two-hole anchors may only be installed in **thin-wall elements** with the flat steel at right-angles to the slab.

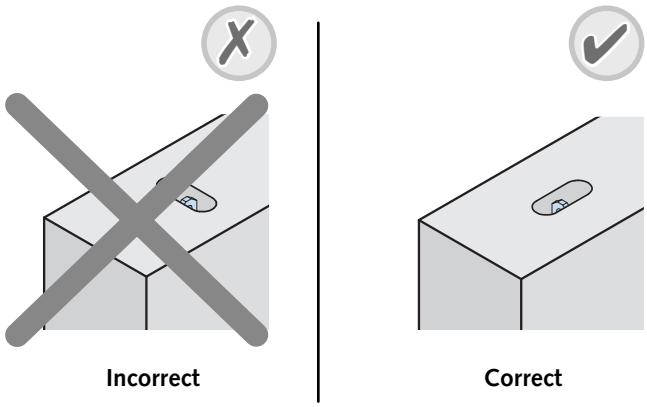



© 2020 HALFEN · TPA 20-E · www.halfen.com

## FRIMEDA LIFTING ANCHOR SYSTEM
# TPA-FS Spread Anchor

### Anchor dimensions

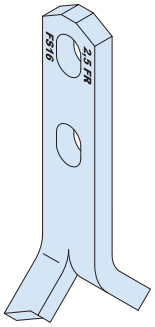


The spread anchor with additional slot is very versatile. It provides efficient anchorage in both thin panels and large surface slabs. For special requirements and very thin walls the spread anchor can also be used as a two-hole anchor.

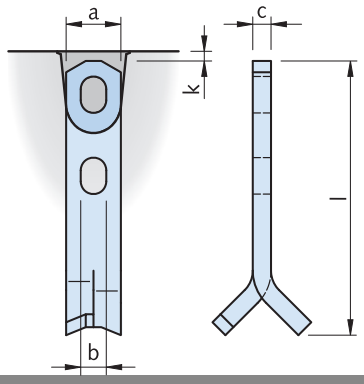


**Dimensions TPA-FS Spread anchor**

| Load class lifting link | Article number Mill finish | Order no. 0070.010- | Article number Hot-dip galvanized | Order no. 0070.110- | a [mm] | b [mm] | c [mm] | l [mm] | k [mm] |
|---|---|---|---|---|---|---|---|---|---|
| 2,5 | TPA-FS 1,4-11 | 00002 | TPA-FS 1,4-11 FV | 00033 | 30 | 14 | 6 | 110 | 10 |
| | TPA-FS 1,4-16 | 00003 | TPA-FS 1,4-16 FV | 00034 | 30 | 14 | 6 | 160 | |
| | TPA-FS 2,5-15 | 00007 | TPA-FS 2,5-15 FV | 00038 | 30 | 14 | 10 | 150 | |
| | TPA-FS 2,5-20 | 00008 | TPA-FS 2,5-20 FV | 00039 | 30 | 14 | 10 | 200 | |
| | TPA-FS 2,5-25 | 00009 | TPA-FS 2,5-25 FV | 00040 | 30 | 14 | 10 | 250 | |
| 5,0 | TPA-FS 4,0-18 | 00013 | TPA-FS 4,0-18 FV | 00044 | 40 | 18 | 12 | 180 | 10 |
| | TPA-FS 4,0-24 | 00014 | TPA-FS 4,0-24 FV | 00045 | 40 | 18 | 12 | 240 | |
| | TPA-FS 4,0-32 | 00015 | TPA-FS 4,0-32 FV | 00046 | 40 | 18 | 12 | 320 | |
| | TPA-FS 5,0-18 | 00016 | TPA-FS 5,0-18 FV | 00047 | 40 | 18 | 15 | 180 | |
| | TPA-FS 5,0-24 | 00017 | TPA-FS 5,0-24 FV | 00048 | 40 | 18 | 15 | 240 | |
| | TPA-FS 5,0-40 | 00018 | TPA-FS 5,0-40 FV | 00049 | 40 | 18 | 15 | 400 | |
| 10,0 | TPA-FS 7,5-26 | 00022 | TPA-FS 7,5-26 FV | 00053 | 60 | 26 | 16 | 260 | 15 |
| | TPA-FS 7,5-30 | 00023 | TPA-FS 7,5-30 FV | 00054 | 60 | 26 | 16 | 300 | |
| | TPA-FS 7,5-42 | 00024 | TPA-FS 7,5-42 FV | 00055 | 60 | 26 | 16 | 420 | |
| | TPA-FS 10,0-30 | 00025 | TPA-FS 10,0-30 FV | 00056 | 60 | 26 | 20 | 300 | |
| | TPA-FS 10,0-37 | 00026 | TPA-FS 10,0-37 FV | 00057 | 60 | 26 | 20 | 370 | |
| | TPA-FS 10,0-52 | 00027 | TPA-FS 10,0-52 FV | 00058 | 60 | 26 | 20 | 520 | |
| 26,0 | TPA-FS 14,0-37 | 00028 | TPA-FS 14,0-37 FV | 00059 | 80 | 35 | 20 | 370 | 15 |
| | TPA-FS 14,0-46 | 00029 | TPA-FS 14,0-46 FV | 00060 | 80 | 35 | 20 | 460 | |
| | TPA-FS 22,0-50 | 00030 | TPA-FS 22,0-50 FV | 00062 | 90 | 35 | 28 | 500 | |
| | TPA-FS 22,0-62 | 00031 | TPA-FS 22,0-62 FV | 00063 | 90 | 35 | 28 | 620 | |

**Technical basics**

- Observe the minimum edge distance (ez/2) for the spherical head anchor.
- Constructive measures may be taken to lower the edge distance (reinforcement).
- Present reinforcement can be assumed as contributing towards the minimal required reinforcement for the transport anchor.
- Elements must be designed for load case “transport”.
- Horizontally cast element must be removed from the tilt-up table near vertical at an angle ≥ 75°, otherwise the load case is “pitching”.
- Reducing the reinforcement is possible if the anchor is not subjected to maximum possible load or if other measures are taken.

## FRIMEDA LIFTING ANCHOR SYSTEM
## TPA-FS Spread Anchor

### Reinforcement near the anchor in thin-wall precast elements

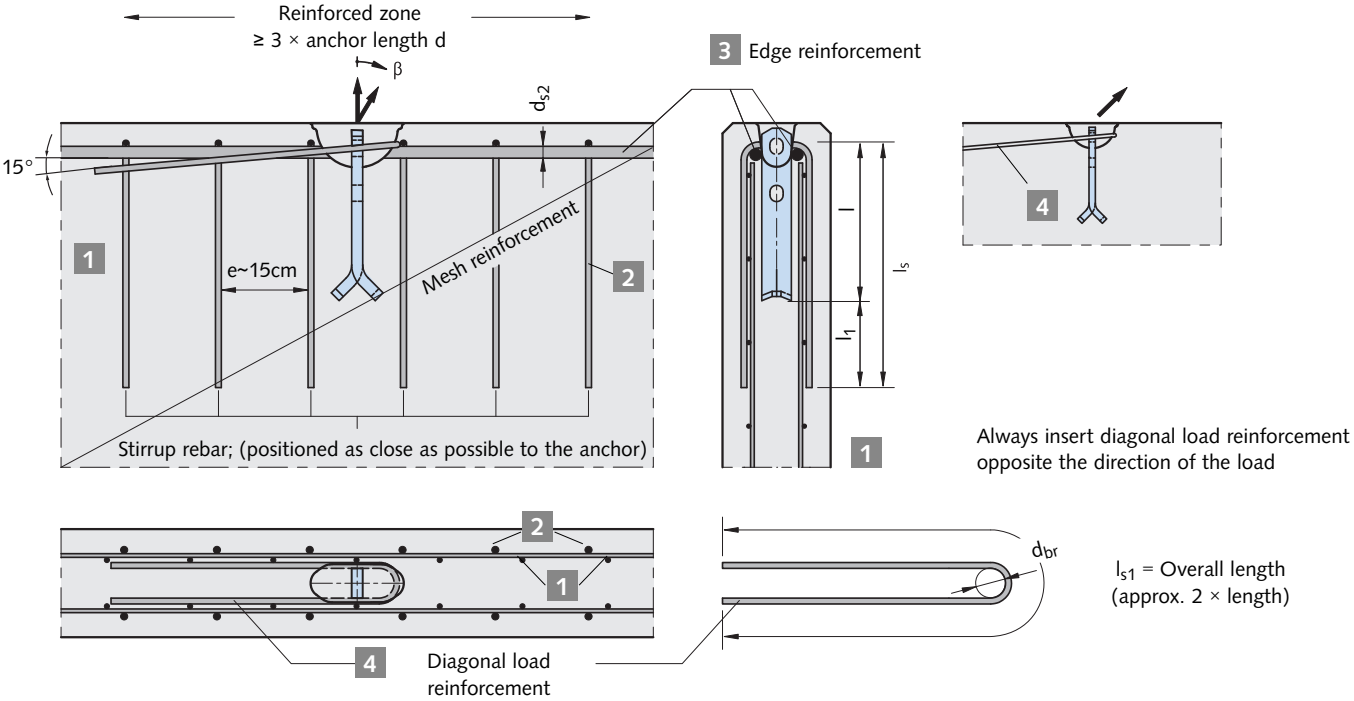


The diagonal load reinforcement must be placed as close as possible under the recess former and installed with full contact to the anchor.

A bend radius according to DIN EN 1992 is not mandatory for the diagonal strirrup.

### Reinforcement of thin precast concrete elements

| Load class lifting links | Load class anchor | 1 Mesh reinforcement both sides, crosswise **Pull** (β ≤ 30°) [mm²/m] | 2 ① U-bar B500B **Diagonal load** (β > 30°) number | $d_s$ [mm] | $l_1$ [mm] | 3 Edge reinforcement B500B $d_{s2}$ [mm] | 4 ② Diagonal pull reinforcement B500B $d_{s1}$ [mm] | $d_{br,min}$ [mm] | $l_{s1}$ |
|---|---|---|---|---|---|---|---|---|---|
| 2,5 | 1,4 | 2 × 131 | 4 | Ø 6 | 400 | Ø 8 | Ø 6 | 47 | 900 |
| | 2,5 | | 4 | Ø 8 | 600 | Ø 10 | Ø 8 | 47 | 1200 |
| 5,0 | 4,0 | 2 × 131 | 4 | Ø 8 | 800 | Ø 12 | Ø 10 | 53 | 1500 |
| | 5,0 | | 4 | Ø 10 | 800 | Ø 12 | Ø 12 | 53 | 1550 |
| 10,0 | 7,5 | 2 × 188 | 4 | Ø 10 | 800 | Ø 12 | Ø 14 | 71 | 2000 |
| | 10,0 | | 6 | Ø 10 | 1000 | Ø 14 | Ø 16 | 71 | 2300 |
| 26,0 | 14,0 | 2 × 377 | 8 | Ø 10 | 1000 | Ø 14 | Ø 20 | 116 | 2600 |
| | 22,0 | | 8 | Ø 10 | 1200 | Ø 16 | Ø 28 | 116 | 3450 |

① $l_s = l_1$ + Anchor length l
When using short anchors and a high minimum number of stirrup their spacing has to be less than 15 cm.

② **No diagonal pull reinforcement is needed for concrete strength of:**
- $\beta_W$ 15 N/mm² + 3-times minimum element thickness
- $\beta_W$ 25 N/mm² + 2.5-times minimum element thickness
- $\beta_W$ 35 N/mm² + 2-times minimum element thickness


© 2020 HALFEN · TPA 20-E · www.halfen.com

## FRIMEDA LIFTING ANCHOR SYSTEM
# TPA-FS Spread Anchor

### Spread anchors in slabs

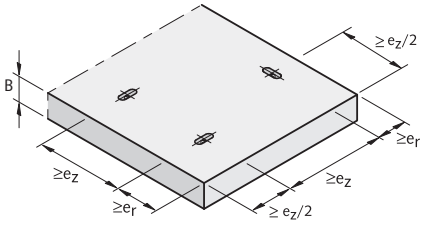


The spread anchors can be used in slab-type elements.
Specified edge and axial anchor spacings must be observed.

Required reinforcement 1, reinforcement 4 only with diagonal pull. → see table on page 24 "Reinforcement of thin precast concrete elements".

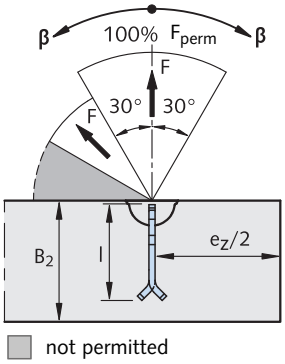


**TPA-FS Spread anchor in slabs: Load capacities and installation dimensions**

| Load class lifting link | Article number | Anchor length l [mm] | Minimum element thickness $B_2$ [mm] | Load capacities with $f_{ci}$* ≥ 15 N/mm² Axial pull [kN] | Load capacities with $f_{ci}$* ≥ 15 N/mm² Diagonal pull [kN] | Minimum edge distances / slabs $e_r$ with $\beta_W$ ≥ 15 N/mm² [mm] | Minimum edge distances / slabs $e_r$ with $\beta_W$ ≥ 25 N/mm² [mm] | Minimum edge distances / slabs $e_r$ with $\beta_W$ ≥ 35 N/mm² [mm] | Minimum axial anchor spacing $e_z$ [mm] |
|---|---|---|---|---|---|---|---|---|---|
| 2,5 | TPA-FS 1,4 - 11 | 110 | 145 | 14.0 | 11.2 | 70 | 50 | 40 | 380 |
| | TPA-FS 1,4 - 16 | 160 | 195 | 14.0 | 11.2 | 50 | 35 | 35 | 530 |
| | TPA-FS 2,5 - 15 | 150 | 185 | 25.0 | 20.0 | 120 | 85 | 70 | 520 |
| | TPA-FS 2,5 - 20 | 200 | 235 | 25.0 | 20.0 | 90 | 65 | 50 | 720 |
| | TPA-FS 2,5 - 25 | 250 | 285 | 25.0 | 20.0 | 75 | 50 | 40 | 920 |
| 5,0 | TPA-FS 4,0 - 18 | 180 | 215 | 40.0 | 32.0 | 190 | 135 | 105 | 610 |
| | TPA-FS 4,0 - 24 | 240 | 275 | 40.0 | 32.0 | 145 | 100 | 80 | 850 |
| | TPA-FS 4,0 - 32 | 320 | 355 | 40.0 | 32.0 | 110 | 75 | 60 | 1175 |
| | TPA-FS 5,0 - 18 | 180 | 215 | 50.0 | 40.0 | 260 | 180 | 145 | 600 |
| | TPA-FS 5,0 - 24 | 240 | 275 | 50.0 | 40.0 | 195 | 140 | 110 | 840 |
| | TPA-FS 5,0 - 40 | 400 | 435 | 50.0 | 40.0 | 115 | 85 | 65 | 1480 |
| 10,0 | TPA-FS 7,5 - 26 | 260 | 300 | 75.0 | 60.0 | 300 | 215 | 175 | 900 |
| | TPA-FS 7,5 - 30 | 300 | 340 | 75.0 | 60.0 | 265 | 190 | 150 | 1060 |
| | TPA-FS 7,5 - 42 | 420 | 460 | 75.0 | 60.0 | 190 | 135 | 110 | 1540 |
| | TPA-FS 10,0 - 30 | 300 | 340 | 100.0 | 80.0 | 390 | 275 | 220 | 1030 |
| | TPA-FS 10,0 - 37 | 370 | 410 | 100.0 | 80.0 | 315 | 225 | 180 | 1310 |
| | TPA-FS 10,0 - 52 | 520 | 560 | 100.0 | 80.0 | 225 | 160 | 130 | 1910 |
| 26,0 | TPA-FS 14,0 - 37 | 370 | 410 | 140.0 | 112.0 | 500 | 355 | 285 | 1230 |
| | TPA-FS 14,0 - 46 | 460 | 500 | 140.0 | 112.0 | 400 | 285 | 230 | 1590 |
| | TPA-FS 22,0 - 50 | 500 | 540 | 220.0 | 176.0 | 675 | 480 | 385 | 1700 |
| | TPA-FS 22,0 - 62 | 620 | 660 | 220.0 | 176.0 | 540 | 385 | 310 | 2180 |

- Required reinforcement: minimum standard reinforcement
- The concrete cover for the anchor foot is 25mm. Slab thicknesses < $B_2$ are only possible with suitable corrosion protection.
- The upper reinforcement must be dimensioned for load case `transport´.

*$f_{ci}$ = cube concrete strength at time of lifting

## FRIMEDA LIFTING ANCHOR SYSTEM

# TPA-FS Spread Anchor – no Special Requirements on the Reinforcement

### Load capacities of FRIMEDA Lifting anchors in beams and walls – no special reinforcement requirements

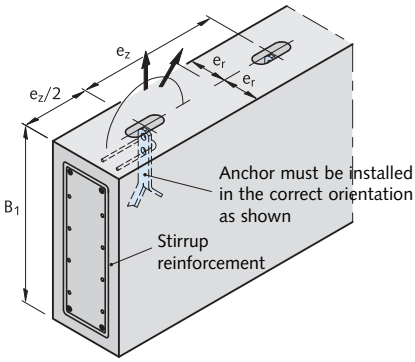


Required reinforcement:
1 , 4* → see table on page 24 "Reinforcement of thin precast concrete elements".
*reinforcement 4 only with diagonal pull

**Spread anchors in beams and walls — no special reinforcement requirements (load class 2,5 – 5,0)**

| Load class lifting links | Article number | Anchor length l [mm] | Min. height of beams $B_1$ [mm] | Wall thickness $2 \times e_r$ [mm] | Load capacity [kN] at concrete strength $f_{ci}$ for **Axial pull** up to 30° [β]] 15 N/mm² | **Diagonal pull** up to 60° [β] 15 N/mm² | **Axial pull** and **diagonal pull** up to 60° [β] 25 N/mm² | **Axial pull** and **diagonal pull** up to 60° [β] 35 N/mm² | Axial spacing of anchors $e_z$ [mm] |
|---|---|---|---|---|---|---|---|---|---|
| 2,5 | TPA-FS 1,4 - 11 | 110 | 240 | 80 | 11.5 | 9.2 | 14.0 | 14.0 | 380 |
| | TPA-FS 1,4 - 11 | 110 | 240 | 100 | 13.6 | 10.9 | 14.0 | 14.0 | 380 |
| | TPA-FS 1,4 - 11 | 110 | 240 | 120 | 14.0 | 12.5 | 14.0 | 14.0 | 380 |
| | TPA-FS 1,4 - 16 | 160 | 340 | 70 | 13.2 | 11.4 | 14.0 | 14.0 | 530 |
| | TPA-FS 1,4 - 16 | 160 | 340 | 80 | 14.0 | 12.6 | 14.0 | 14.0 | 530 |
| | TPA-FS 1,4 - 16 | 160 | 340 | 100 | 14.0 | 14.0 | 14.0 | 14.0 | 530 |
| | TPA-FS 2,5 - 15 | 150 | 320 | 120 | 19.8 | 15.9 | 25.0 | 25.0 | 520 |
| | TPA-FS 2,5 - 15 | 150 | 320 | 150 | 23.4 | 18.8 | 25.0 | 25.0 | 520 |
| | TPA-FS 2,5 - 15 | 150 | 320 | 180 | 25.0 | 21.5 | 25.0 | 25.0 | 520 |
| | TPA-FS 2,5 - 20 | 200 | 420 | 100 | 20.5 | 17.7 | 25.0 | 25.0 | 720 |
| | TPA-FS 2,5 - 20 | 200 | 420 | 120 | 24.6 | 20.3 | 25.0 | 25.0 | 720 |
| | TPA-FS 2,5 - 20 | 200 | 420 | 150 | 25.0 | 24.0 | 25.0 | 25.0 | 720 |
| | TPA-FS 2,5 - 25 | 250 | 520 | 100 | 20.6 | 20.6 | 25.0 | 25.0 | 920 |
| | TPA-FS 2,5 - 25 | 250 | 520 | 120 | 24.7 | 24.7 | 25.0 | 25.0 | 920 |
| | TPA-FS 2,5 - 25 | 250 | 520 | 140 | 25.0 | 25.0 | 25.0 | 25.0 | 920 |
| 5,0 | TPA-FS 4,0 - 18 | 180 | 380 | 180 | 30.8 | 24.7 | 39.8 | 40.0 | 610 |
| | TPA-FS 4,0 - 18 | 180 | 380 | 240 | 38.3 | 30.6 | 40.0 | 40.0 | 610 |
| | TPA-FS 4,0 - 18 | 180 | 380 | 300 | 40.0 | 36.2 | 40.0 | 40.0 | 610 |
| | TPA-FS 4,0 - 24 | 240 | 500 | 150 | 34.4 | 27.5 | 40.0 | 40.0 | 850 |
| | TPA-FS 4,0 - 24 | 240 | 500 | 180 | 39.5 | 31.6 | 40.0 | 40.0 | 850 |
| | TPA-FS 4,0 - 24 | 240 | 500 | 200 | 40.0 | 34.2 | 40.0 | 40.0 | 850 |
| | TPA-FS 4,0 - 32 | 320 | 660 | 120 | 31.1 | 29.7 | 40.0 | 40.0 | 1175 |
| | TPA-FS 4,0 - 32 | 320 | 660 | 150 | 38.9 | 35.1 | 40.0 | 40.0 | 1175 |
| | TPA-FS 4,0 - 32 | 320 | 660 | 180 | 40.0 | 40.0 | 40.0 | 40.0 | 1175 |
| | TPA-FS 5,0 - 18 | 180 | 380 | 240 | 37.8 | 30.2 | 48.8 | 50.0 | 600 |
| | TPA-FS 5,0 - 18 | 180 | 380 | 300 | 44.7 | 35.7 | 50.0 | 50.0 | 600 |
| | TPA-FS 5,0 - 18 | 180 | 380 | 400 | 50.0 | 44.3 | 50.0 | 50.0 | 600 |
| | TPA-FS 5,0 - 24 | 240 | 500 | 200 | 42.3 | 33.9 | 50.0 | 50.0 | 840 |
| | TPA-FS 5,0 - 24 | 240 | 500 | 240 | 48.5 | 38.8 | 50.0 | 50.0 | 840 |
| | TPA-FS 5,0 - 24 | 240 | 500 | 300 | 50.0 | 45.9 | 50.0 | 50.0 | 840 |
| | TPA-FS 5,0 - 40 | 400 | 820 | 150 | 40.5 | 40.5 | 50.0 | 50.0 | 1480 |
| | TPA-FS 5,0 - 40 | 400 | 820 | 180 | 48.6 | 48.2 | 50.0 | 50.0 | 1480 |
| | TPA-FS 5,0 - 40 | 400 | 820 | 200 | 50.0 | 50.0 | 50.0 | 50.0 | 1480 |

* $f_{ci}$ = cube concrete strength at time of lifting


© 2020 HALFEN · TPA 20-E · www.halfen.com

## FRIMEDA LIFTING ANCHOR SYSTEM

# TPA-FS Spread Anchor – no Special Requirements on the Reinforcement

### Load capacities of FRIMEDA Lifting anchors in beams and walls — no special reinforcement requirements

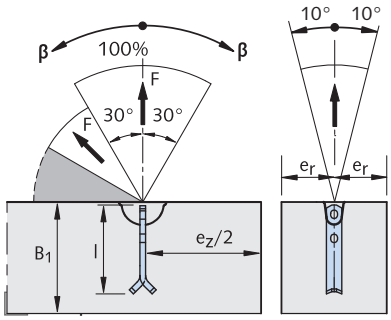


not permitted

- diagonal pull at 30° < β ≤ 60° without reinforcement is only allowed for:
  - $\beta_W \geq 15\,N/mm^2$ + 3 times minimum wall thickness
  - $\beta_W \geq 25\,N/mm^2$ + 2.5 times minimum wall thickness
  - $\beta_W \geq 35\,N/mm^2$ + 2 times minimum wall thickness

  (minimum wall thickness = 2 × $e_r$)
- $F_{perm}$ can be assumed at 100 % if concrete strength $\beta_W \geq 23\,N/mm^2$.
- diagonal pull with cable/chain spread β > 60° is not permitted!

### Spread anchor in beams and walls — no special reinforcement requirements (load class 5,0 – 26,0)

| Load class lifting link | Article number | Anchor length l [mm] | Minimum height of beams $B_1$ [mm] | Wall thickness 2 × $e_r$ [mm] | Load capacity [kN] at concrete strength $f_{ci}$* for: **Axial pull** up to 30° [β] 15 N/mm² | **Diagonal pull** up to 45° [β] 15 N/mm² | **Axial pull** and **Diagonal pull** up to 60° [β] 25 N/mm² | **Axial pull** and **Diagonal pull** up to 60° [β] 35 N/mm² | Axial spacing of anchors $e_z$ [mm] |
|---|---|---|---|---|---|---|---|---|---|
| 10,0 | TPA-FS 7,5 - 26 | 260 | 550 | 300 | 61.1 | 48.9 | 75.0 | 75.0 | 900 |
| | TPA-FS 7,5 - 26 | 260 | 550 | 400 | 75.0 | 60.7 | 75.0 | 75.0 | 900 |
| | TPA-FS 7,5 - 26 | 260 | 550 | 500 | 75.0 | 71.8 | 75.0 | 75.0 | 900 |
| | TPA-FS 7,5 - 30 | 300 | 630 | 250 | 60.3 | 48.2 | 75.0 | 75.0 | 1060 |
| | TPA-FS 7,5 - 30 | 300 | 630 | 300 | 69.1 | 55.3 | 75.0 | 75.0 | 1060 |
| | TPA-FS 7,5 - 30 | 300 | 630 | 400 | 75.0 | 68.6 | 75.0 | 75.0 | 1060 |
| | TPA-FS 7,5 - 42 | 420 | 870 | 180 | 62.6 | 50.1 | 75.0 | 75.0 | 1540 |
| | TPA-FS 7,5 - 42 | 420 | 870 | 240 | 75.0 | 62.1 | 75.0 | 75.0 | 1540 |
| | TPA-FS 7,5 - 42 | 420 | 870 | 300 | 75.0 | 73.5 | 75.0 | 75.0 | 1540 |
| | TPA-FS 10,0 - 30 | 300 | 630 | 400 | 84.7 | 67.8 | 100.0 | 100.0 | 1030 |
| | TPA-FS 10,0 - 30 | 300 | 630 | 500 | 100.0 | 80.1 | 100.0 | 100.0 | 1030 |
| | TPA-FS 10,0 - 30 | 300 | 630 | 600 | 100.0 | 91.9 | 100.0 | 100.0 | 1030 |
| | TPA-FS 10,0 - 37 | 370 | 770 | 300 | 81.8 | 65.4 | 100.0 | 100.0 | 1310 |
| | TPA-FS 10,0 - 37 | 370 | 770 | 400 | 100.0 | 81.2 | 100.0 | 100.0 | 1310 |
| | TPA-FS 10,0 - 37 | 370 | 770 | 500 | 100.0 | 95.9 | 100.0 | 100.0 | 1310 |
| | TPA-FS 10,0 - 52 | 520 | 1070 | 240 | 92.2 | 73.7 | 100.0 | 100.0 | 1910 |
| | TPA-FS 10,0 - 52 | 520 | 1070 | 300 | 100.0 | 87.2 | 100.0 | 100.0 | 1910 |
| | TPA-FS 10,0 - 52 | 520 | 1070 | 400 | 100.0 | 100.0 | 100.0 | 100.0 | 1910 |
| 26,0 | TPA-FS 14,0 - 37 | 370 | 770 | 500 | 116.2 | 93.0 | 140.0 | 140.0 | 1230 |
| | TPA-FS 14,0 - 37 | 370 | 770 | 600 | 133.3 | 106.6 | 140.0 | 140.0 | 1230 |
| | TPA-FS 14,0 - 37 | 370 | 770 | 750 | 140.0 | 126.8 | 140.0 | 140.0 | 1230 |
| | TPA-FS 14,0 - 46 | 460 | 950 | 400 | 119.0 | 95.2 | 140.0 | 140.0 | 1590 |
| | TPA-FS 14,0 - 46 | 460 | 950 | 500 | 140.0 | 112.6 | 140.0 | 140.0 | 1590 |
| | TPA-FS 14,0 - 46 | 460 | 950 | 600 | 140.0 | 129.1 | 140.0 | 140.0 | 1590 |
| | TPA-FS 22,0 - 50 | 500 | 1030 | 600 | 170.7 | 136.6 | 220.0 | 220.0 | 1700 |
| | TPA-FS 22,0 - 50 | 500 | 1030 | 800 | 211.8 | 169.5 | 220.0 | 220.0 | 1700 |
| | TPA-FS 22,0 - 50 | 500 | 1030 | 1000 | 220.0 | 200.3 | 220.0 | 220.0 | 1700 |
| | TPA-FS 22,0 - 62 | 620 | 1270 | 500 | 179.6 | 143.7 | 220.0 | 220.0 | 2180 |
| | TPA-FS 22,0 - 62 | 620 | 1270 | 600 | 205.9 | 164.7 | 220.0 | 220.0 | 2180 |
| | TPA-FS 22,0 - 62 | 620 | 1270 | 800 | 220.0 | 204.4 | 220.0 | 220.0 | 2180 |

*$f_{ci}$ = cube concrete strength at time of lifting

## FRIMEDA LIFTING ANCHOR SYSTEM
# TPA-FS Spread Anchor – with Reinforcement Subjected to Load

### Load capacities of FRIMEDA Lifting anchors in beams and walls; reinforcement subjected to load

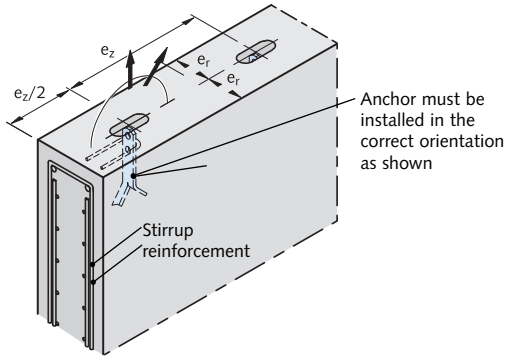


Required reinforcement:
1 – 4 → see table on page 24 "Reinforcement of thin precast concrete elements".
Closed stirrup reinforcement can be used in place of U-bars in beams.

**Spread anchor in beams and walls – with reinforcement subjected to load (load class 2,5 – 5,0)**

| Load class lifting link | Article number | Anchor length l [mm] | Wall thickness 2 × $e_r$ [mm] | Load capacity [kN] at concrete strength $f_{ci}$* for: **Axial pull** up to 30° [β] 15 N/mm² | **Diagonal pull** up to 45° [β] 15 N/mm² | **Axial pull** and **Diagonal pull** up to 60° [β] 25 N/mm² | **Axial pull** and **Diagonal pull** up to 60° [β] 35 N/mm² | Axial spacing of anchors $e_z$ [mm] |
|---|---|---|---|---|---|---|---|---|
| 2,5 | TPA-FS 1,4 - 11 | 110 | 80 | 14.0 | 12.9 | 14.0 | 14.0 | 380 |
| | TPA-FS 1,4 - 11 | 110 | 100 | 14.0 | 14.0 | 14.0 | 14.0 | 380 |
| | TPA-FS 1,4 - 11 | 110 | 120 | 14.0 | 14.0 | 14.0 | 14.0 | 380 |
| | TPA-FS 1,4 - 16 | 160 | 70 | 13.2 | 13.2 | 14.0 | 14.0 | 530 |
| | TPA-FS 1,4 - 16 | 160 | 80 | 14.0 | 14.0 | 14.0 | 14.0 | 530 |
| | TPA-FS 1,4 - 16 | 160 | 100 | 14.0 | 14.0 | 14.0 | 14.0 | 530 |
| | TPA-FS 2,5 - 15 | 150 | 100 | 20.6 | 19.8 | 25.0 | 25.0 | 520 |
| | TPA-FS 2,5 - 15 | 150 | 120 | 24.6 | 21.7 | 25.0 | 25.0 | 520 |
| | TPA-FS 2,5 - 15 | 150 | 150 | 25.0 | 24.3 | 25.0 | 25.0 | 520 |
| | TPA-FS 2,5 - 20 | 200 | 90 | 18.5 | 18.5 | 23.9 | 25.0 | 720 |
| | TPA-FS 2,5 - 20 | 200 | 100 | 20.6 | 20.6 | 25.0 | 25.0 | 720 |
| | TPA-FS 2,5 - 20 | 200 | 125 | 25.0 | 25.0 | 25.0 | 25.0 | 720 |
| | TPA-FS 2,5 - 25 | 250 | 80 | 16.4 | 16.4 | 21.2 | 25.0 | 920 |
| | TPA-FS 2,5 - 25 | 250 | 100 | 20.6 | 20.6 | 25.0 | 25.0 | 920 |
| | TPA-FS 2,5 - 25 | 250 | 120 | 24.7 | 24.7 | 25.0 | 25.0 | 920 |
| 5,0 | TPA-FS 4,0 - 18 | 180 | 150 | 36.2 | 29.0 | 40.0 | 40.0 | 610 |
| | TPA-FS 4,0 - 18 | 180 | 200 | 40.0 | 33.5 | 40.0 | 40.0 | 610 |
| | TPA-FS 4,0 - 18 | 180 | 240 | 40.0 | 36.7 | 40.0 | 40.0 | 610 |
| | TPA-FS 4,0 - 24 | 240 | 140 | 36.3 | 36.3 | 40.0 | 40.0 | 850 |
| | TPA-FS 4,0 - 24 | 240 | 160 | 40.0 | 40.0 | 40.0 | 40.0 | 850 |
| | TPA-FS 4,0 - 24 | 240 | 180 | 40.0 | 40.0 | 40.0 | 40.0 | 850 |
| | TPA-FS 4,0 - 32 | 320 | 120 | 31.1 | 31.1 | 40.0 | 40.0 | 1175 |
| | TPA-FS 4,0 - 32 | 320 | 140 | 36.3 | 36.3 | 40.0 | 40.0 | 1175 |
| | TPA-FS 4,0 - 32 | 320 | 160 | 40.0 | 40.0 | 40.0 | 40.0 | 1175 |
| | TPA-FS 5,0 - 18 | 180 | 240 | 45.1 | 36.1 | 50.0 | 50.0 | 600 |
| | TPA-FS 5,0 - 18 | 180 | 300 | 50.0 | 40.4 | 50.0 | 50.0 | 600 |
| | TPA-FS 5,0 - 18 | 180 | 400 | 50.0 | 46.6 | 50.0 | 50.0 | 600 |
| | TPA-FS 5,0 - 24 | 240 | 180 | 48.7 | 43.5 | 50.0 | 50.0 | 840 |
| | TPA-FS 5,0 - 24 | 240 | 200 | 50.0 | 45.8 | 50.0 | 50.0 | 840 |
| | TPA-FS 5,0 - 24 | 240 | 240 | 50.0 | 50.0 | 50.0 | 50.0 | 840 |
| | TPA-FS 5,0 - 40 | 400 | 160 | 43.2 | 43.2 | 50.0 | 50.0 | 1480 |
| | TPA-FS 5,0 - 40 | 400 | 180 | 48.7 | 48.7 | 50.0 | 50.0 | 1480 |
| | TPA-FS 5,0 - 40 | 400 | 200 | 50.0 | 50.0 | 50.0 | 50.0 | 1480 |

* $f_{ci}$ = cube concrete strength at time of lifting


© 2020 HALFEN · TPA 20-E · www.halfen.com

## FRIMEDA LIFTING ANCHOR SYSTEM
# TPA-FS Spread Anchor – with Reinforcement Subjected to Load

### Load capacities of FRIMEDA Lifting anchors in beams and walls; reinforcement subjected to load

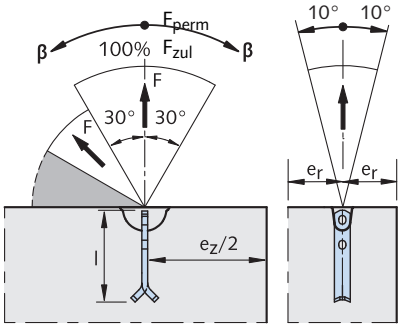


not permitted

- diagonal pull at 30° < β ≤ 60° without reinforcement is only allowed for:
  - $\beta_W \geq 15\,N/mm^2$ + 3 times minimum wall thickness
  - $\beta_W \geq 25\,N/mm^2$ + 2.5 times minimum wall thickness
  - $\beta_W \geq 35\,N/mm^2$ + 2 times minimum wall thickness

  (minimum wall thickness = 2 × $e_r$)
- $F_{perm}$ can be assumed at 100 % if concrete strength $\beta_W \geq 23\ N/mm^2$.
- diagonal pull with cable/chain spread β > 60° is not permitted!

**Spread anchor in beams and walls — with reinforcement subjected to load (load class 5,0 – 26,0)**

| Load class lifting link | Article number | Anchor length l [mm] | Wall thickness 2 × $e_r$ [mm] | Load capacity [kN] at concrete strength $f_{ci}$* for **Axial pull** up to 30° [β] 15 N/mm² | **Diagonal pull** up to 45° [β] 15 N/mm² | **Axial pull** and **Diagonal pull** up to 60° [β] 25 N/mm² | **Axial pull** and **Diagonal pull** up to 60° [β] 35 N/mm² | Axial spacing of anchors $e_z$ [mm] |
|---|---|---|---|---|---|---|---|---|
| 10,0 | TPA-FS 7,5 - 26 | 260 | 240 | 68.2 | 54.5 | 75.0 | 75.0 | 900 |
| | TPA-FS 7,5 - 26 | 260 | 300 | 75.0 | 61.0 | 75.0 | 75.0 | 900 |
| | TPA-FS 7,5 - 26 | 260 | 400 | 75.0 | 70.4 | 75.0 | 75.0 | 900 |
| | TPA-FS 7,5 - 30 | 300 | 200 | 73.1 | 58.5 | 75.0 | 75.0 | 1060 |
| | TPA-FS 7,5 - 30 | 300 | 240 | 75.0 | 64.0 | 75.0 | 75.0 | 1060 |
| | TPA-FS 7,5 - 30 | 300 | 300 | 75.0 | 71.6 | 75.0 | 75.0 | 1060 |
| | TPA-FS 7,5 - 42 | 420 | 160 | 60.0 | 60.0 | 75.0 | 75.0 | 1540 |
| | TPA-FS 7,5 - 42 | 420 | 180 | 67.5 | 67.5 | 75.0 | 75.0 | 1540 |
| | TPA-FS 7,5 - 42 | 420 | 200 | 75.0 | 75.0 | 75.0 | 75.0 | 1540 |
| | TPA-FS 10,0 - 30 | 300 | 400 | 100.0 | 81.4 | 100.0 | 100.0 | 1030 |
| | TPA-FS 10,0 - 30 | 300 | 500 | 100.0 | 91.0 | 100.0 | 100.0 | 1030 |
| | TPA-FS 10,0 - 30 | 300 | 600 | 100.0 | 99.7 | 100.0 | 100.0 | 1030 |
| | TPA-FS 10,0 - 37 | 370 | 300 | 100.0 | 89.3 | 100.0 | 100.0 | 1310 |
| | TPA-FS 10,0 - 37 | 370 | 400 | 100.0 | 100.0 | 100.0 | 100.0 | 1310 |
| | TPA-FS 10,0 - 37 | 370 | 500 | 100.0 | 100.0 | 100.0 | 100.0 | 1310 |
| | TPA-FS 10,0 - 52 | 520 | 240 | 94.7 | 94.7 | 100.0 | 100.0 | 1910 |
| | TPA-FS 10,0 - 52 | 520 | 300 | 100.0 | 100.0 | 100.0 | 100.0 | 1910 |
| | TPA-FS 10,0 - 52 | 520 | 400 | 100.0 | 100.0 | 100.0 | 100.0 | 1910 |
| 26,0 | TPA-FS 14,0 - 37 | 370 | 500 | 138.3 | 110.6 | 140.0 | 140.0 | 1230 |
| | TPA-FS 14,0 - 37 | 370 | 600 | 140.0 | 121.2 | 140.0 | 140.0 | 1230 |
| | TPA-FS 14,0 - 37 | 370 | 750 | 140.0 | 135.5 | 140.0 | 140.0 | 1230 |
| | TPA-FS 14,0 - 46 | 460 | 350 | 140.0 | 118.9 | 140.0 | 140.0 | 1590 |
| | TPA-FS 14,0 - 46 | 460 | 400 | 140.0 | 127.1 | 140.0 | 140.0 | 1590 |
| | TPA-FS 14,0 - 46 | 460 | 500 | 140.0 | 140.0 | 140.0 | 140.0 | 1590 |
| | TPA-FS 22,0 - 50 | 500 | 600 | 209.6 | 167.7 | 220.0 | 220.0 | 1700 |
| | TPA-FS 22,0 - 50 | 500 | 800 | 220.0 | 193.6 | 220.0 | 220.0 | 1700 |
| | TPA-FS 22,0 - 50 | 500 | 1000 | 220.0 | 216.5 | 220.0 | 220.0 | 1700 |
| | TPA-FS 22,0 - 62 | 620 | 400 | 218.9 | 175.1 | 220.0 | 220.0 | 2180 |
| | TPA-FS 22,0 - 62 | 620 | 600 | 220.0 | 214.5 | 220.0 | 220.0 | 2180 |
| | TPA-FS 22,0 - 62 | 620 | 700 | 220.0 | 220.0 | 220.0 | 220.0 | 2180 |

*$f_{ci}$ = cube concrete strength at time of lifting

## FRIMEDA LIFTING ANCHOR SYSTEM
# TPA-FS Spread Anchor

### Load capacity, installation dimensions for tilt-up and turning

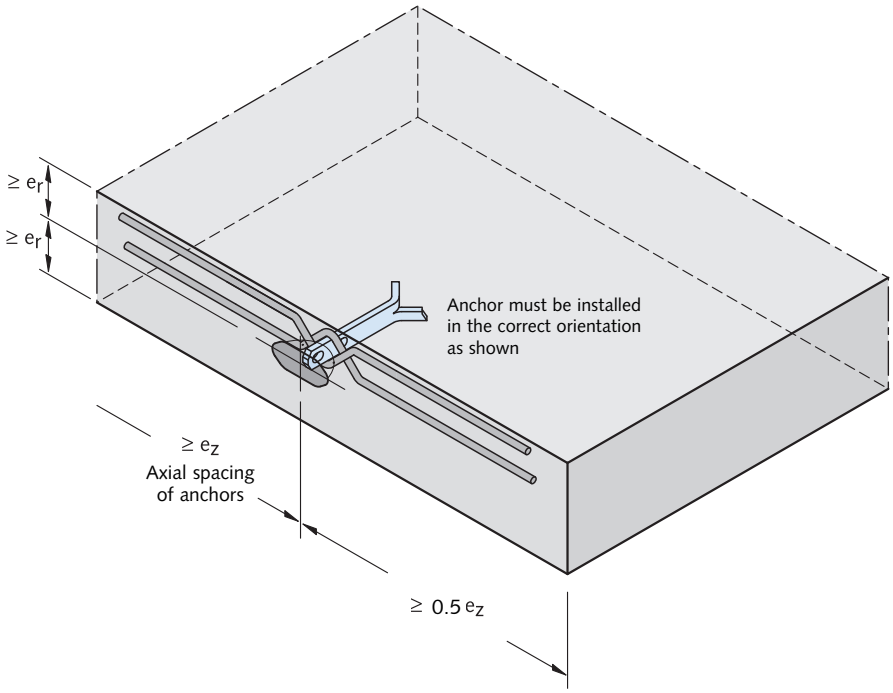


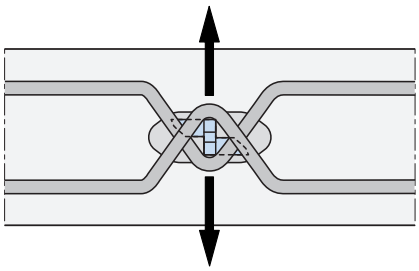

The horizontal legs of the tilt-up and turning reinforcement are located directly within the outermost position of the reinforced area.

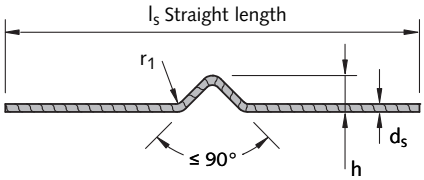


(h depends on the component thickness)

Material: Reinforcing steel B500B ①

### Load capacities, installation dimensions for tilting and turning

| Load class lifting link | Article number | $f_{ci} \geq 15\,N/mm^2$ perm. load capacities for **tilting** [kN] | Minimum edge distance $e_r$ and axial spacing of anchors $e_z$ for $\beta_W \geq 15\,N/mm^2$ $e_r$ [mm] | $e_z$ [mm] | Tilting and turning reinforcement $d_s$ [mm] | $r_1$ [mm] | $l_s$ ① [mm] |
|---|---|---|---|---|---|---|---|
| 2,5 | TPA-FS 1,4 - 16 | 7.0 | 100 | 700 | Ø 10 | 25 | 700 |
| | TPA-FS 2,5 - 25 | 12.5 | 100 | 875 | Ø 12 | 25 | 800 |
| 5,0 | TPA-FS 4,0 - 32 | 20.0 | 150 | 1050 | Ø 14 | 32 | 950 |
| | TPA-FS 5,0 - 40 | 25.0 | 150 | 1435 | Ø 16 | 32 | 1000 |
| 10,0 | TPA-FS 7,5 - 42 | 37.5 | 250 | 1470 | Ø 20 | 40 | 1200 |
| | TPA-FS 10,0 - 52 | 50.0 | 300 | 1820 | Ø 20 | 40 | 1500 |
| 26,0 | TPA-FS 14,0 - 46 | 70.0 | 525 | 1800 | Ø 25 | 50 | 1800 |
| | TPA-FS 22,0 - 62 | 110.0 | 710 | 2200 | Ø 28 | 50 | 1800 |

① $l_S$ = Length before bending reinforcement steel, bending radii according to DIN EN 1992
② 100% load is permitted with a concrete strength = $\beta W \geq 23\,N/mm^2$
**Required reinforcement**: minimum standard reinforcement


© 2020 HALFEN · TPA 20-E · www.halfen.com

## FRIMEDA LIFTING ANCHOR SYSTEM
# TPA-FZ Two-hole Anchor

## Anchor dimensions

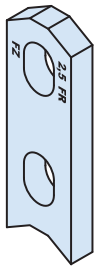


The head of the two-hole anchor is similar to the head of the spread anchor. The second hole in the lower part of the anchor allows an additional reinforcement bar to be used. Anchorage in the concrete is achieved with this additional reinforcement bar. Longer anchors with more additional holes can be made on request.

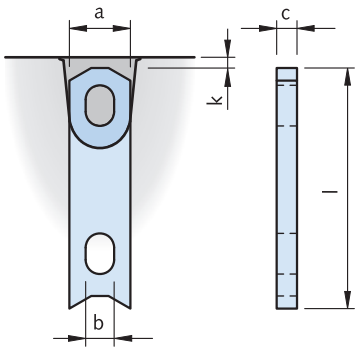


**Dimensions TPA-FZ Two-hole anchors**

| Load class lifting link | Article number Mill finish | Order no. 0070.020- | Article number **Hot-dip galvanized** | Order no. 0070.110- | a [mm] | b [mm] | c [mm] | l [mm] | k [mm] |
|---|---|---|---|---|---|---|---|---|---|
| 2,5 | TPA-FZ 1,4-9 | 00002 | TPA-FZ 1,4- 9 FV | 00064 | 30 | 14 | 6 | 90 | 10 |
| | TPA-FZ 2,5-9 | 00003 | TPA-FZ 2,5- 9 FV | 00065 | 30 | 14 | 8 | 90 | 10 |
| 5,0 | TPA-FZ 4,0-12 | 00005 | TPA-FZ 4,0-12 FV | 00067 | 40 | 18 | 10 | 120 | 10 |
| | TPA-FZ 5,0-12 | 00006 | TPA-FZ 5,0-12 FV | 00068 | 40 | 18 | 12 | 120 | 10 |
| | TPA-FZ 7,5-16 | 00007 | TPA-FZ 7,5-16 FV | 00069 | 40 | 18 | 15 | 120 | 10 |
| 10,0 | TPA-FZ 10,0-17 | 00009 | TPA-FZ 10,0-17 FV | 00071 | 60 | 26 | 16 | 160 | 15 |
| | TPA-FZ 14,0-24 | 00010 | TPA-FZ 14,0-24 FV | 00072 | 60 | 30 | 20 | 165 | 15 |
| 26,0 | TPA-FZ 22,0-30 | 00011 | TPA-FZ 22,0-30 FV | 00073 | 80 | 35 | 20 | 240 | 15 |
| | TPA-FZ 26,0-30 | 00013 | TPA-FZ 26,0-30 FV | 00075 | 90 | 35 | 28 | 300 | 15 |
| | TPA-FZ 26,0-30 | 00012 | TPA-FZ 26,0-30 FV | 00074 | 120 | 65 | 30 | 300 | 15 |

## Maximum edge and axial anchor spacings, load capacities

| TPA-FZ | Edge and axial anchor spacings | | | | Load capacities TPA-FZ | | |
|---|---|---|---|---|---|---|---|
| Load class lifting link | Article number | Anchor length l [mm] | Anchor spacings $e_z$ [mm] | Minimum thickness of precast unit $2 \times e_r$ [mm] | for $f_{ci} \geq 15\,N/mm^2$ 100 % $F_{perm}$ **Pull** ($\beta \leq 30°$) [kN] | for $f_{ci} \geq 15\,N/mm^2$ 80 % $F_{perm}$ **Diagonal pull** ($\beta > 30°$) [kN] | for $f_{ci} \geq 25\,N/mm^2$ **Pull + Diagonal pull** [kN] |
| 2,5 | TPA-FZ 1,4- 9 | 90 | 500 | 80 | 14 | 11,2 | 14 |
| | TPA-FZ 2,0- 9 | 90 | 600 | 90 | 20 | 16 | 20 |
| | TPA-FZ 2,5- 9 | 90 | 600 | 100 | 25 | 20 | 25 |
| 5,0 | TPA-FZ 4,0-12 | 120 | 700 | 110 | 40 | 32 | 40 |
| | TPA-FZ 5,0-12 | 120 | 750 | 120 | 50 | 40 | 50 |
| 10,0 | TPA-FZ 7,5-16 | 160 | 1200 | 130 | 75 | 60 | 75 |
| | TPA-FZ 10,0-17 | 165 | 1200 | 140 | 100 | 80 | 100 |
| 26,0 | TPA-FZ 14,0-24 | 240 | 1500 | 160 | 140 | 112 | 140 |
| | TPA-FZ 22,0-30 | 300 | 1500 | 180 | 220 | 176 | 220 |
| | TPA-FZ 26,0-30 | 300 | 1500 | 200 | 260 | 208 | 260 |

Observe the reinforcement specifications on page 32–33

## FRIMEDA LIFTING ANCHOR SYSTEM
# TPA-FZ Two-hole Anchor

### Reinforcement in anchor zone

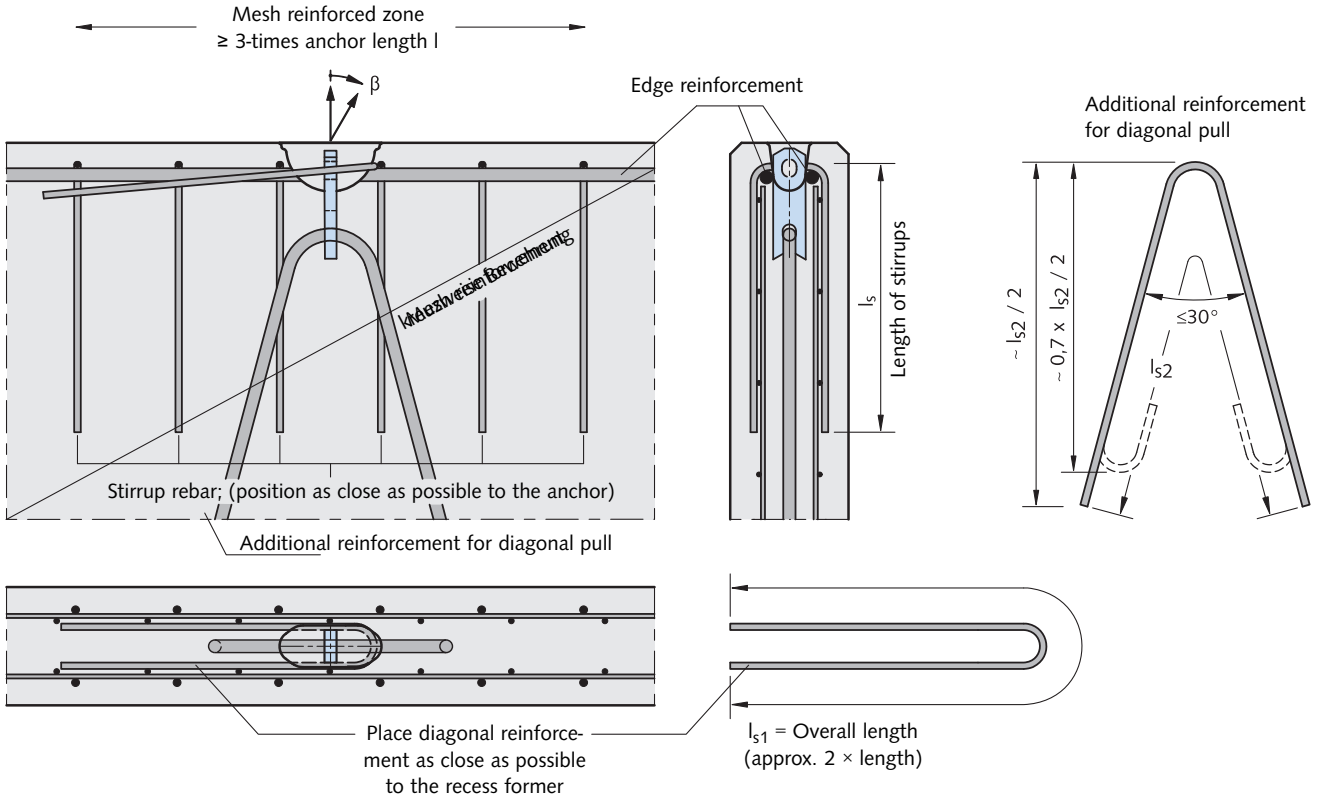


### Reinforcement

| Load class Anchor | Article number | Cross-wise mesh reinforcement [mm²/m] | Reinforcement with **Axial pull** (β ≤ 30°): Stirrup B500B $d_s \times l_s$ [mm] | Edge reinforcement B500B [mm] | ② Additional reinforcement for pull B500B both sides $d_{s2} \times l_{s2}$ [mm] | Reinforcement with **Diagonal pull** (β > 30° – 45°): Stirrup B500B $d_s \times l_s$ [mm] | Edge reinforcement B500B [mm] | ② Additional reinforcement for pull B500B $d_{s2} \times l_{s2}$ [mm] | ① Diagonal pull reinforcement B500B $d_{s1} \times l_{s1}$ [mm] |
|---|---|---|---|---|---|---|---|---|---|
| 1,4 | TPA-FZ 1,4- 9 | 131 | 2 Ø 6 × 400 | constructive | 1 Ø 10 × 650 | 4 Ø 6 × 400 | Ø 8 | 1 Ø 10 × 650 | Ø 6 × 900 |
| 2,5 | TPA-FZ 2,5- 9 | | 2 Ø 8 × 600 | | 1 Ø 12 × 1000 | 4 Ø 8 × 600 | Ø 10 | 1 Ø 12 × 1000 | Ø 8 × 1200 |
| 4,0 | TPA-FZ 4,0-12 | 131 | 2 Ø 8 × 700 | constructive | 1 Ø 16 × 1200 | 4 Ø 8 × 800 | Ø 12 | 1 Ø 16 × 1200 | Ø 10 × 1500 |
| 5,0 | TPA-FZ 5,0-12 | | 2 Ø 8 × 800 | | 1 Ø 16 × 1500 | 4 Ø 10 × 800 | Ø 12 | 1 Ø 16 × 1500 | Ø 12 × 1550 |
| 7,5 | TPA-FZ 7,5-16 | 188 | 2 Ø 10 × 800 | Ø 10 | 1 Ø 20 × 1750 | 4 Ø 10 × 800 | Ø 12 | 1 Ø 20 × 1750 | Ø 14 × 2000 |
| 10,0 | TPA-FZ 10,0-17 | | 4 Ø 10 × 800 | Ø 12 | 1 Ø 25 × 1850 | 6 Ø 10 × 1000 | Ø 14 | 1 Ø 25 × 1850 | Ø 16 × 2300 |
| 14,0 | TPA-FZ 14,0-24 | 257 | 4 Ø 10 × 1000 | Ø 14 | 1 Ø 28 × 2350 | 8 Ø 10 × 1000 | Ø 14 | 1 Ø 28 × 2350 | Ø 20 × 2600 |
| 22,0 | TPA-FZ 22,0-30 | | 4 Ø 12 × 1200 | | 1 Ø 28 × 3000 | 8 Ø 10 × 1200 | Ø 16 | 1 Ø 28 × 3000 | Ø 25 × 3000 |
| 26,0 | TPA-FZ 26,0-30 | | 6 Ø 12 × 1200 | | 2 Ø 28 × 3050 | 8 Ø 12 × 1200 | Ø 16 | 2 Ø 28 × 3050 | Ø 28 × 3450 |

① **No diagonal pull reinforcement is needed for concrete strength of:**
- $\beta_W \geq 15$ N/mm² + 3-times minimum element thickness
- $\beta_W \geq 25$ N/mm² + 2.5-times minimum element thickness
- $\beta_W \geq 35$ N/mm² + 2-times minimum element thickness

② For other concrete strengths, the length $L_{s2}$ of the additional reinforcement bar for pull may be reduced in relation to the permissible bond stress ( $\beta_W$ = 25 N/mm² : × 0.8; $\beta_W$ = 35 N/mm² : × 0.65 )

Please contact HALFEN if the concrete strength is lower or if lightweight concrete is used.


© 2020 HALFEN · TPA 20-E · www.halfen.com

## FRIMEDA LIFTING ANCHOR SYSTEM
## TPA-FZ Two-hole Anchor

### Reinforcement in anchor zone – Diagonal pull reinforcement

**With no diagonal pull reinforcement**

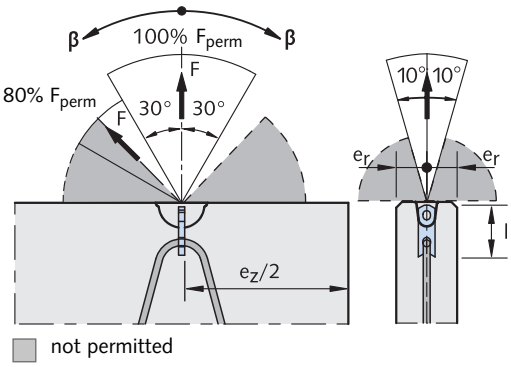


**With diagonal pull reinforcement**

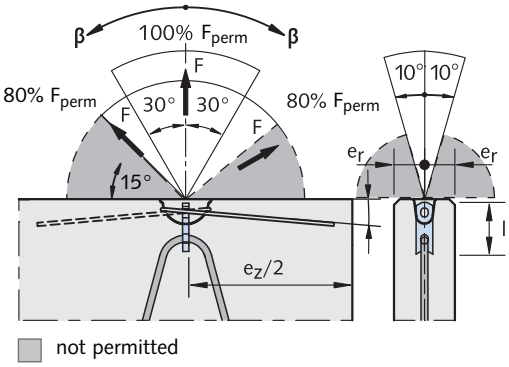


**Diagonal pull at 30° < β ≤ 45° with no diagonal pull reinforcement is allowable only if:**
$\beta_W \geq 15\,N/mm^2$ + 3-times min. element thickness
$\beta_W \geq 25\,N/mm^2$ + 2.5-times min. element thickness
$\beta_W \geq 35\,N/mm^2$ + 2-times min. element thickness
(minimum thickness of element: e = 2 × er)

**Diagonal pull is not permissable** for two-hole anchors. Two-hole anchors are **not suitable for application in slab-type elements (floor slabs, stairs)**.
The diagonal pull reinforcement has to be placed **close to the recess former** in direct contact with the anchor.

## FRIMEDA LIFTING ANCHOR SYSTEM

# TPA-FA Double Shoulder Erection Anchor / TPA-FE Single Shoulder Erection Anchor (tilt-up)

### Anchor dimensions TPA-FA

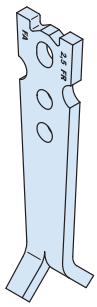

Load class 1,4 – 10,0

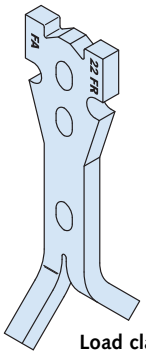

Load class 12,5 – 22,0

Due to the specially shaped anchor head the lifting clutch rests on the anchor and not the concrete when subjected to lateral loads; the pitching loads react through the anchor avoiding spalling in the concrete. Two semi-circular notches are provided in the anchor for additional pitching and turning reinforcement bars.

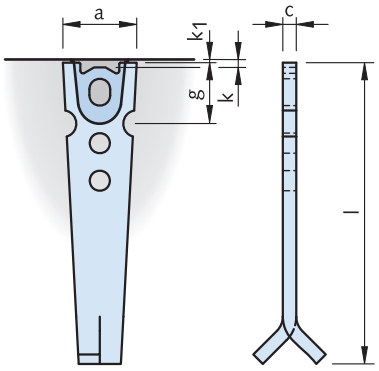


**Dimensions — TPA-FA Double shoulder erection anchor (tilt-up)**

| Load class lifting link | Article number **Mill finish** | Order no. 0070.030- | Article number **Hot-dip galvanized** | Order no. 0070.110- | l [mm] | a [mm] | c [mm] | g [mm] | k [mm] | $k_1$ [mm] |
|---|---|---|---|---|---|---|---|---|---|---|
| 2,5 | TPA-FA 1,4- 20 | 00001 | TPA-FA 1,4- 20 FV | 00001 | 200 | 55 | 6 | 45 | 10 | 5 |
| | TPA-FA 2,5- 23 | 00002 | TPA-FA 2,5- 23 FV | 00002 | 230 | 55 | 10 | 45 | | |
| 5,0 | TPA-FA 4,0-27 | 00003 | TPA-FA 4,0-27 FV | 00003 | 270 | 70 | 12 | 70 | 10 | 5 |
| | TPA-FA 5,0-29 | 00004 | TPA-FA 5,0-29 FV | 00004 | 290 | 70 | 15 | 70 | | |
| 10,0 | TPA-FA 7,5-32 | 00005 | TPA-FA 7,5-32 FV | 00005 | 320 | 95 | 15 | 90 | 15 | 6 |
| | TPA-FA 10,0-39 | 00006 | TPA-FA 10,0-39 FV | 00006 | 390 | 95 | 20 | 90 | | |
| 26,0 | TPA-FA 12,5-48 | 00007 | TPA-FA 12,5-48 FV | 00007 | 485 | 148 | 20 | 90 | 15 | 9 |
| | TPA-FA 17,0-48 | 00008 | TPA-FA 17,0-48 FV | 00008 | 485 | 148 | 25 | 90 | | |
| | TPA-FA 22,0-50 | 00009 | TPA-FA 22,0-50 FV | 00009 | 500 | 148 | 30 | 90 | | |

### Anchor dimensions TPA-FE

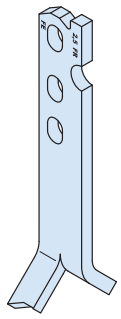

Load class 1,4 – 10,0

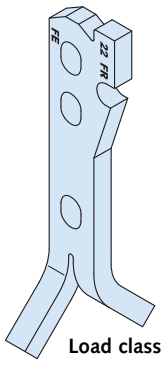

Load class 12,5 – 22,0

Compared to the TPA-FA tilt-up anchor the TPA-FE anchor can only be subjected to load in one direction. Its shape makes it particularly suitable for thin components. A single semi-circular notch is provided in the anchor for additional reinforcement bars for pitching and turning.

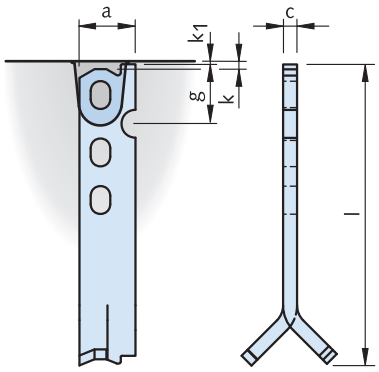


**Dimensions — TPA-FE Single shoulder erection anchor (tilt-up)**

| Load class lifting link | Article number **Mill finish** | Order no. 0070.040- | Article number **Hot-dip galvanized** | Order no. 0070.110- | l [mm] | a [mm] | c [mm] | g [mm] | k [mm] | $k_1$ [mm] |
|---|---|---|---|---|---|---|---|---|---|---|
| 2,5 | TPA-FE 1,4- 20 | 00001 | TPA-FE 1,4- 20 FV | 00010 | 200 | 40 | 6 | 42.2 | 10 | 5 |
| | TPA-FE 2,5- 23 | 00002 | TPA-FE 2,5- 23 FV | 00011 | 230 | 40 | 10 | 42.5 | | |
| 5,0 | TPA-FE 4,0-27 | 00003 | TPA-FE 4,0-27 FV | 00012 | 270 | 55 | 12 | 50.5 | 10 | 5 |
| | TPA-FE 5,0-29 | 00004 | TPA-FE 5,0-29 FV | 00013 | 290 | 55 | 15 | 50.5 | | |
| 10,0 | TPA-FE 7,5-32 | 00005 | TPA-FE 7,5-32 FV | 00014 | 320 | 80 | 15 | 78.0 | 15 | 6 |
| | TPA-FE 10,0-39 | 00006 | TPA-FE 10,0-39 FV | 00015 | 390 | 80 | 20 | 78.0 | | |
| 26,0 | TPA-FE 12,5-48 | 00007 | TPA-FE 12,5-48 FV | 00016 | 485 | 115 | 20 | 88.5 | 15 | 9 |
| | TPA-FE 17,0-48 | 00008 | TPA-FE 17,0-48 FV | 00017 | 485 | 115 | 25 | 88.5 | | |
| | TPA-FE 22,0-50 | 00009 | TPA-FE 22,0-50 FV | 00018 | 500 | 115 | 30 | 88.5 | | |



© 2020 HALFEN · TPA 20-E · www.halfen.com

## FRIMEDA LIFTING ANCHOR SYSTEM

## TPA-FA Double Shoulder Erection Anchor / TPA-FE Single Shoulder Erection Anchor (tilt-up)

### Reinforcement in the anchor zone

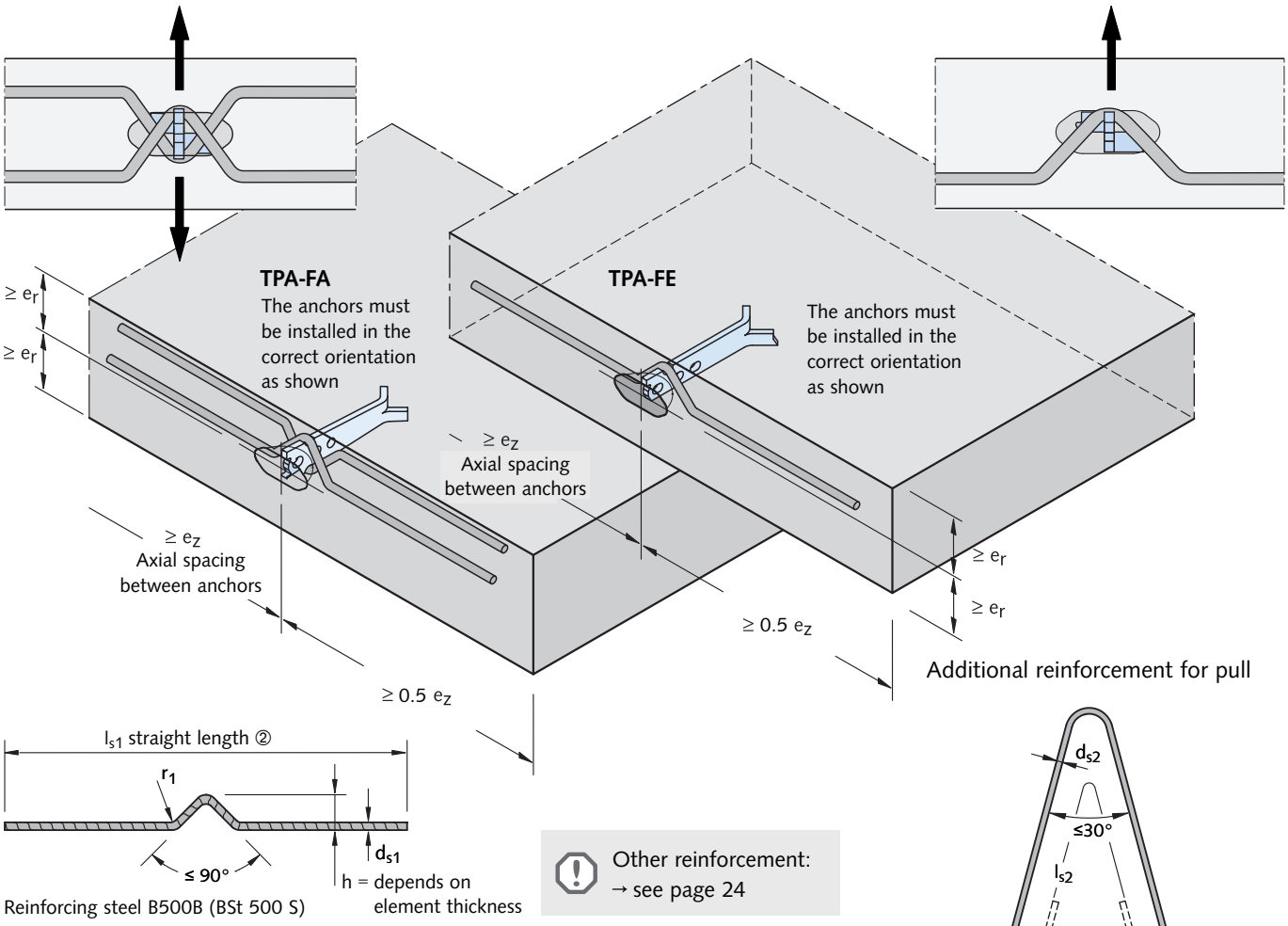





Reinforcing steel B500B (BSt 500 S)

Other reinforcement:
→ see page 24

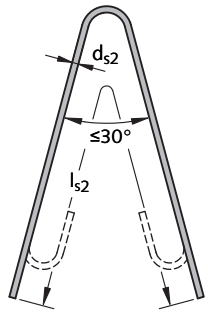


**Additional reinforcement for tilt-up of thin-wall concrete precast elements ①**

| Load class lifting link | Load class anchor | Tilt-up and pitching reinforcement with $f_{ci}$ ≥ 15 N/mm² | | | Additional reinforcement for pull with $f_{ci}$ ≥ 15 N/mm² | |
|---|---|---|---|---|---|---|
| | | $d_{s1}$ ① [mm] | $l_{s1}$ [mm] | $r_1$ [mm] | $d_{s2}$ [mm] | $l_{s2}$ [mm] |
| 2,5 | 1,4 | Ø 10 | 700 | 25 | Ø 10 | 650 |
| | 2,5 | Ø 12 | 800 | | Ø 12 | 1000 |
| 5,0 | 4,0 | Ø 14 | 950 | 32 | Ø 16 | 1200 |
| | 5,0 | Ø 16 | 1000 | | Ø 16 | 1500 |
| 10,0 | 7,5 | Ø 20 | 1200 | 40 | Ø 20 | 1750 |
| | 10,0 | Ø 20 | 1500 | | Ø 20 | 1900 |
| 26,0 | 12,5 | Ø 25 | 1500 | 50 | Ø 25 | 2200 |
| | 17,0 | Ø 25 | 1800 | | Ø 28 | 2500 |
| | 22,0 | Ø 28 | 1800 | | Ø 28 | 3000 |

① Reinforcement from page 24 No. 1 + 2 is required
② $l_{s1}$ = length before bending / bending radii according to DIN EN 1992
For other concrete strengths the length $l_{s1}$ of the tilt-up reinforcement can be reduced in relation to the permitted composite stresses.
($\beta_W$ = 25 N/mm² : × 0.8; $\beta_W$ = 35 N/mm² : × 0.65)

The horizontal legs of the pitching and turning reinforcement are located directly towards the inside of the outermost reinforcement.
The bilateral pitching reinforcement also acts as diagonal pull reinforcement. No further diagonal reinforcement is required.

**Without additional reinforcement for pull:**
Mesh, stirrups and edge reinforcement as for TPA-FS.

**With additional reinforcement for pull:**
Mesh, stirrups and edge reinforcement as for TPA-FZ.

## FRIMEDA LIFTING ANCHOR SYSTEM

# TPA-FA Double Shoulder Erection Anchor / TPA-FE Single Shoulder Erection Anchor (tilt-up)

## Load capacities, installation dimensions

### Lifting TPA-FA

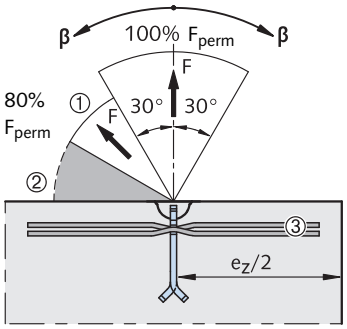


not permitted

### TPA-FA, tilt-up

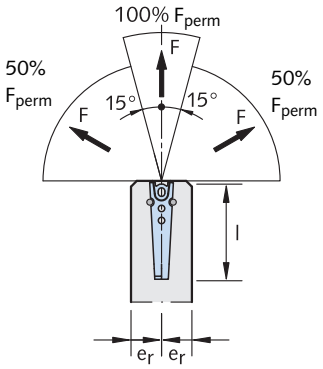


① $F_{perm}$ can be assumed at 100 % if concrete strength $\beta_W \geq 23$ N/mm²

② Angles of β > 60° due to cable spread are not allowed → see page 17!

③ Insert the tilt-up reinforcement in the anchor notches.

### Lifting TPA-FE

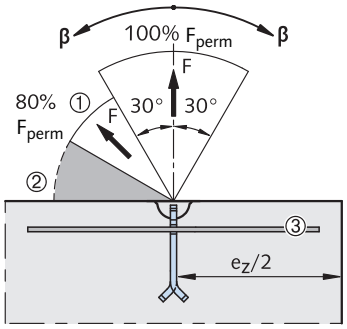


not permitted

### TPA-FE, tilt-up

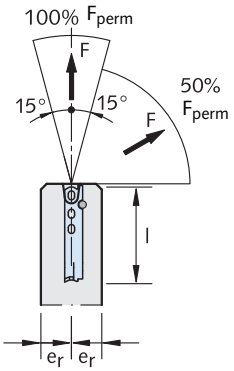


## Load capacities, installation dimensions

| Load class lifting link | Load class anchor | Anchor length l [mm] | Axial $e_z$ [mm] | Minimum thickness (2 × $e_r$) with additional reinforcement for pull: TPA-FE [mm] | with additional reinforcement for pull: TPA-FA [mm] | without additional reinforcement for pull: TPA-FE [mm] | without additional reinforcement for pull: TPA-FA [mm] | Lifting: Pull (β ≤ 30°) 15 N/mm² [kN] | Lifting ①: Diagonal pull (β > 30°) 15 N/mm² [kN] | Lifting ①: Pull/ Diag. pull 25 N/mm² [kN] | Tilt-up 15 N/mm² [kN] | Tilt-up 25 N/mm² [kN] |
|---|---|---|---|---|---|---|---|---|---|---|---|---|
| 2,5 | 1,4 | 200 | 700 | 90 | 100 | 90 | 100 | 14 | 11 | 14 | 7 | 7 |
| | 2,5 | 230 | 800 | 100 | 120 | 110 | 120 | 25 | 22 | 25 | 12 | 13 |
| 5,0 | 4,0 | 270 | 950 | 140 | 150 | 140 | 150 | 38 | 31 | 40 | 20 | 20 |
| | 5,0 | 290 | 1000 | 140 | 160 | 170 | 180 | 47 | 37 | 50 | 25 | 25 |
| 10,0 | 7,5 | 320 | 1200 | 160 | 175 | 200 | 220 | 65 | 52 | 75 | 37 | 38 |
| | 10,0 | 390 | 1500 | 200 | 240 | 250 | 280 | 85 | 65 | 100 | 50 | 50 |
| 26,0 | 12,5 | 485 | 1500 | 220 | 240 | 320 | 350 | 120 | 96 | 125 | 62 | 63 |
| | 17,0 | 485 | | 280 | 300 | 380 | 400 | 140 | 112 | 170 | 85 | 85 |
| | 22,0 | 500 | | 360 | 380 | 470 | 500 | 200 | 160 | 220 | 110 | 110 |

Note: Observe the notes on reinforcement on pages 24



© 2020 HALFEN · TPA 20-E · www.halfen.com

## FRIMEDA LIFTING ANCHOR SYSTEM
# TPA-FU Universal Anchor

### Anchor dimensions, load capacities, installation dimensions, reinforcement

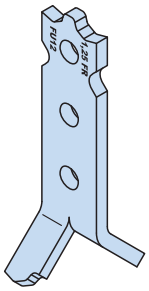

This anchor combines the advantages of spread-, two-hole- and tilt-up anchor but requires only a very small recess in the precast element.

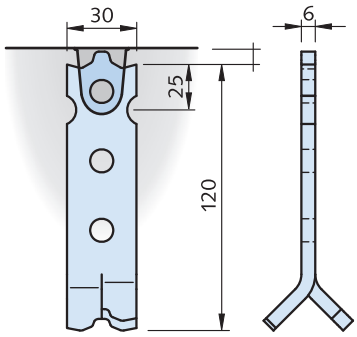


| Universal anchor TPA-FU | | | | |
|---|---|---|---|---|
| Load class | Article number **Mill finish** | Order no. 0070.100- | Article number **Hot-dip galvanized** | Order no. 0070.100- |
| 1,25 | TPA-FU 1,25-12 | 00001 | TPA-FU 1,25-12 FV | 00003 |

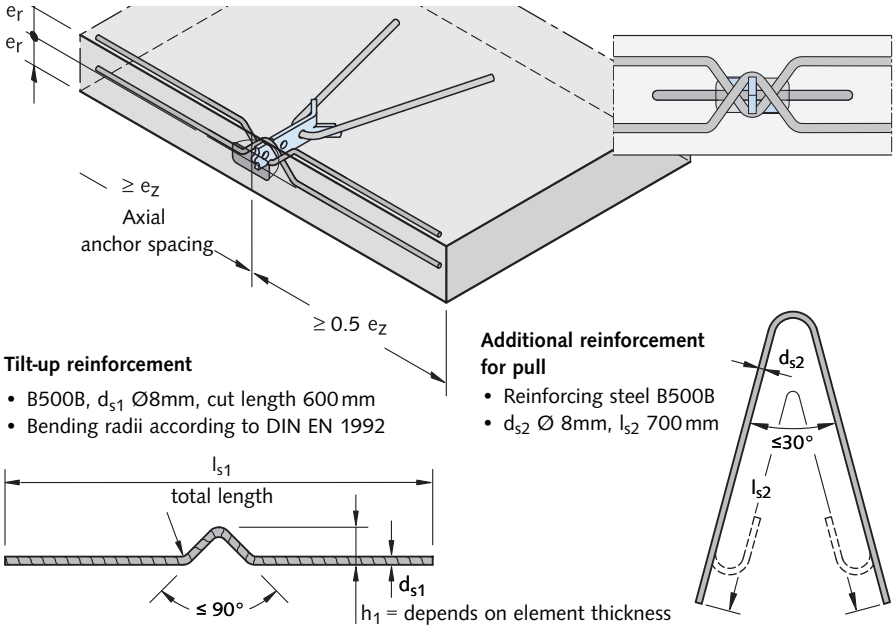


**Tilt-up reinforcement**

- B500B, $d_{s1}$ Ø8mm, cut length 600 mm
- Bending radii according to DIN EN 1992

**Additional reinforcement for pull**

- Reinforcing steel B500B
- $d_{s2}$ Ø 8mm, $l_{s2}$ 700 mm

The tilt-up and transport anchors used in very thin precast concrete elements (e.g. balcony parapet panels) must fulfil the special requirements for this application. The FRIMEDA TPA-FU Universal anchor 1,25–12 has been specially designed for this specific application, and is therefore ideal for tilt-up, turning and lifting this type of element.

**Recommended reinforcement**

Additional reinforcement is required for distributing loads in very thin panels or panels with only a single-layer of reinforcement. Dedicated turning and tilting reinforcement must be used in this application
(→ see illustration on the left).

Further reinforcement:
→ see page 24 (load class 1,4)

### Allowable loads TPA-FU Universal anchor

| Article number | Minimum element thickness | **Axial pull** up to 30° | | | **Diagonal pull** up to 45° | | | **Tilt-up and turning** | | | Minimum axial spacing |
|---|---|---|---|---|---|---|---|---|---|---|---|
| | | Permitted load at concrete strength $f_{ci}$ = | | | Permitted load at concrete strength $f_{ci}$ = | | | Permitted load at concrete strength $f_{ci}$ = | | | |
| | 2 × $e_r$ | 15 N/mm² | 25 N/mm² | 35 N/mm² | 15 N/mm² | 25 N/mm² | 35 N/mm² | 15 N/mm² | 25 N/mm² | 35 N/mm² | $e_z$ |
| | [mm] | [kN] | [kN] | [kN] | [kN] | [kN] | [kN] | [kN] | [kN] | [kN] | [mm] |
| TPA-FU 1,25-12 | 60 | 10.0 ① | 12.5 ① | 12.5 ① | 10.0 ① | 12.5 ① | 12.5 ① | - | - | - | 240 |
| | 80 | 12.5 ① | 12.5 ① | 12.5 ① | 10.0 ① | 12.5 ① | 12.5 ① | 4.1 | 4.6 | 5.0 | |
| | 100 | 12.5 ① | 12.5 | 12.5 | 10.0 ① | 12.5 | 12.5 | 4.5 | 5.2 | 5.6 | |
| | 120 | 12.5 | 12.5 | 12.5 | 12.5 | 12.5 | 12.5 | 4.8 | 5.6 | 6.0 | |
| | 140 | 12.5 | 12.5 | 12.5 | 12.5 | 12.5 | 12.5 | 6.0 | 6.25 | 6.25 | |
| | 160 | 12.5 | 12.5 | 12.5 | 12.5 | 12.5 | 12.5 | 6.25 | 6.25 | 6.25 | |

① with additional reinforcement for pull Ø 8 × 700

## FRIMEDA LIFTING ANCHOR SYSTEM
# TPA-FF Flat Foot Anchor

### Anchor dimensions TPA-FF

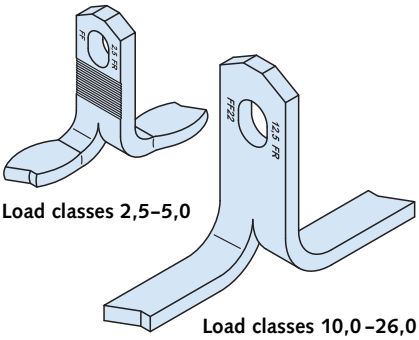


For all large surface, thin precast elements that are lifted perpendicular to their main face.
This anchor is an alternative to the TPA-FP Plate anchor. The main use is in elements with a concrete strength at lifting in excess of 25 N/mm² and more.

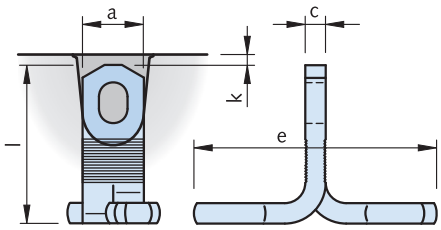


**Load capacity of the flat foot anchor**
To ensure load distribution in the flat foot anchor, it is crucial that the flat foot is positioned under the main reinforcement. If this is not possible, suitable additional reinforcement must be placed over the flat foot.

The additional reinforcement is not included in delivery.

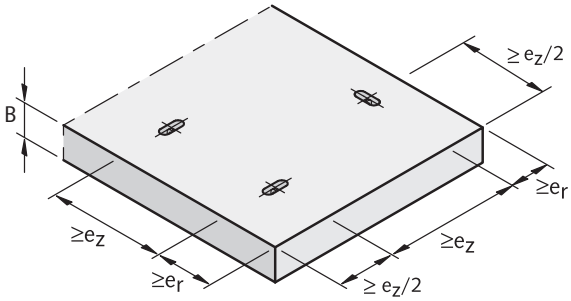


Required element dimensions → see table on page 39

**Dimensions — TPA-FF Flat foot anchor**

| Load class lifting link | Article number **Mill finish** | Order no. 0070.070- | Article number **Hot-dip galvanized** | Order no. 0070.110- | a [mm] | c [mm] | l [mm] | e [mm] | k [mm] |
|---|---|---|---|---|---|---|---|---|---|
| 2,5 | TPA-FF 1,4-6 | 00002 | TPA-FF 1,4-6 FV | 00020 | 30 | 6 | 65 | 70 | 10 |
| | TPA-FF 2,5-7 | 00004 | TPA-FF 2,5-7 FV | 00022 | 30 | 10 | 75 | 94 | |
| 5,0 | TPA-FF 4,0-11 | 00006 | TPA-FF 4,0-11 FV | 00024 | 40 | 12 | 110 | 100 | 10 |
| | TPA-FF 5,0-12 | 00007 | TPA-FF 5,0-12 FV | 00025 | 40 | 15 | 125 | 105 | |
| 10,0 | TPA-FF 7,5-17 | 00009 | TPA-FF 7,5-17 FV | 00027 | 60 | 16 | 170 | 120 | 15 |
| | TPA-FF 10,0-20 | 00010 | TPA-FF 10,0-20 FV | 00028 | 60 | 20 | 200 | 120 | |
| 26,0 | TPA-FF 12,5-22 | 00011 | TPA-FF 12,5-22 FV | 00029 | 80 | 16 | 220 | 200 | 15 |
| | TPA-FF 17,0-27 | 00012 | TPA-FF 17,0-27 FV | 00030 | 80 | 20 | 270 | 200 | |
| | TPA-FF 22,0-31 | 00013 | TPA-FF 22,0-31 FV | 00031 | 90 | 28 | 310 | 200 | |


© 2020 HALFEN · TPA 20-E · www.halfen.com

## FRIMEDA LIFTING ANCHOR SYSTEM
## TPA-FF Flat Foot Anchor

### Additional reinforcement in the anchor zone

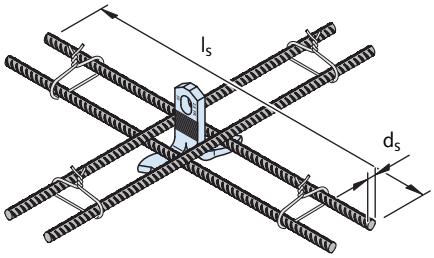


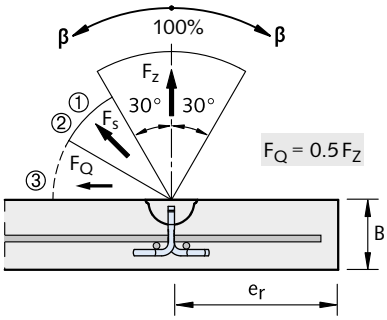


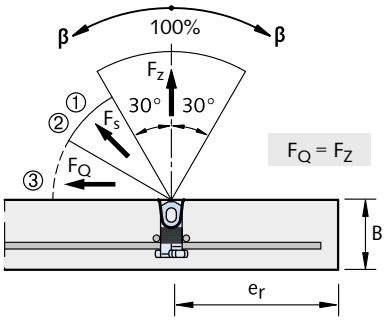


Where loads are acting towards the edge of the element, insert diagonal pull reinforcement as for spread or two-hole anchors. (→ see page 24).

Additional reinforcement has to be placed as close as possible to the anchor.

① Diagonal pull at 30° < β ≤ 60° without diagonal pull reinforcement only permissible when:
$\beta_W \geq 15$ N/mm² + 3-times min. element thickness
$\beta_W \geq 25$ N/mm² + 2.5-times min. element thickness
$\beta_W \geq 35$ N/mm² + 2-times min. element thickness

② If concrete strength $\beta_W \geq 23$ N/mm² then $F_Q = F_s = F_z$

③ **Cable spread of β > 60° is not permitted → see page 17!**

Required reinforcement: top and bottom reinforcement, crosswise → see page 32

The element must be dimensioned for load case `transport´.

**Element dimensions, additional reinforcement and load capacities**

| Load class lifting link | Article number | Anchor length | Minimum element thickness | Min. edge distance or axial anchor spacing | | Additional reinforcement B500B | | Load capacity **Axial pull, Diagonal pull, Transverse pull** at concrete strength $f_{ci}$ | | |
|---|---|---|---|---|---|---|---|---|---|---|
| | | l [mm] | B [mm] | $e_r$ [mm] | $e_z$ [mm] | $d_s$ [mm] | $l_s$ [mm] | ≥15 N/mm² [kN] | ≥25 N/mm² [kN] | ≥35 N/mm² [kN] |
| 2,5 | TPA-FF 1,4 - 6 | 65 | 95④ | 140 | 210 | 8 | 250 | 14.0 | 14.0 | 14.0 |
| | TPA-FF 2,5 - 7 | 75 | 105④ | 160 | 240 | | 300 | 20.0 | 25.0 | 25.0 |
| 5,0 | TPA-FF 4,0 - 11 | 110 | 140 | 230 | 345 | 12 | 450 | 37.0 | 40.0 | 40.0 |
| | TPA-FF 5,0 - 12 | 125 | 160 | 260 | 390 | 12 | 500 | 44.0 | 50.0 | 50.0 |
| 10,0 | TPA-FF 7,5 - 17 | 170 | 215 | 340 | 510 | 14 | 600 | 54.6 | 70.4 | 75.0 |
| | TPA-FF 10,0 - 20 | 200 | 245 | 400 | 600 | 14 | 600 | 77.4 | 100.0 | 100.0 |
| 26,0 | TPA-FF 12,5 - 22 | 220 | 265 | 440 | 660 | 16 | 750 | 96.8 | 125.0 | 125.0 |
| | TPA-FF 17,0 - 27 | 270 | 315 | 540 | 810 | 16 | 900 | 131.6 | 170.0 | 170.0 |
| | TPA-FF 22,0 - 31 | 310 | 355 | 620 | 930 | 20 | 1100 | 170.4 | 220.0 | 220.0 |

④ The elements thickness can be reduced, if corrosion protection is ensured.

# FRIMEDA LIFTING ANCHOR SYSTEM
## TPA-FP Plate Anchor

### Dimensions TPA-FP

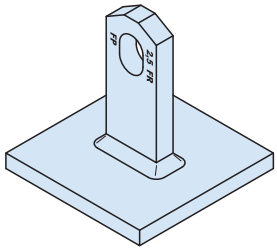

The plate anchor is suitable for all large surface, thin precast elements. Additional cross-wise reinforcement on the anchor plate must be used.

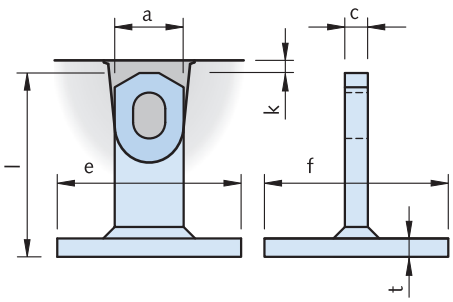


**Dimensions TPA-FP Plate anchor**

| Article number **Mill finish** | Order no. 0070.050- | Article number **Hot-dip galvanized** | Order no. 0070.110- | Load class | a [mm] | c [mm] | l [mm] | e × f [mm] | t [mm] | k [mm] |
|---|---|---|---|---|---|---|---|---|---|---|
| TPA-FP 1,4- 5 | 00001 | TPA-FP 1,4- 5 FV | 00076 | 2,5 | 30 | 6 | 55 | 80 × 80 | 8 | 10 |
| TPA-FP 2,5- 8 | 00002 | TPA-FP 2,5- 8 FV | 00077 | | | 10 | 80 | | | |
| TPA-FP 5,0-12 | 00003 | TPA-FP 5,0-12 FV | 00078 | 5,0 | 40 | 15 | 120 | 100 × 100 | 10 | 10 |
| TPA-FP 10,0-16 | 00004 | TPA-FP 10,0-16 FV | 00079 | 10,0 | 60 | 20 | 160 | 140 × 140 | 12 | 15 |

Other load classes and anchor lengths are available on request

### Load capacities, installation dimensions and additional reinforcement

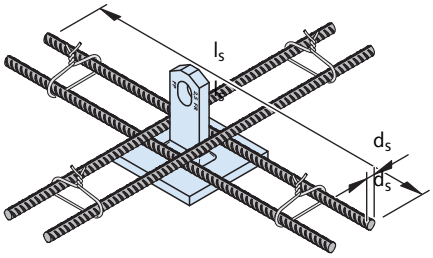


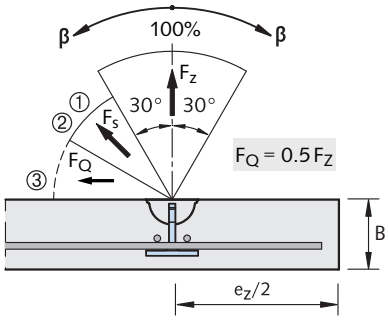


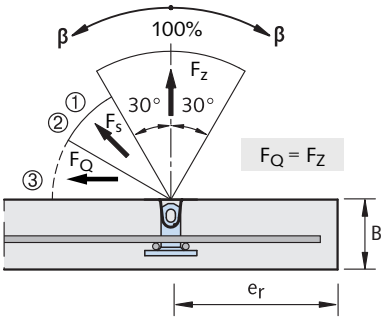


It is important that the reinforcement bars are in direct contact with the anchor base plate!

The element must be dimensioned for load case `transport´.

① Diagonal pull at 30° < β ≤ 60° without diagonal pull reinforcement only permissible when: $\beta_W \geq 15$ N/mm² + 3-times min. element thickness
$\beta_W \geq 25$ N/mm² + 2.5-times min. element thickness
$\beta_W \geq 35$ N/mm² + 2-times min. element thickness

② If concrete strength $\beta_W \geq 23$ N/mm² then $F_Q = F_s = F_z$

③ **Cable spread of β > 60° is not permitted → see page 17!**

Required reinforcement: top and bottom reinforcement, crosswise → see table

**Element dimensions, additional reinforcement and load capacities**

| Load class lifting link | Article name | Anchor length l [mm] | Minimum element thickness B [mm] | Min. edge distance or axial anchor spacing $e_r$ [mm] | $e_z$ [mm] | Top and bottom crosswise reinforcement [mm²/m] | Additional reinforcement $d_s$ [mm] | $l_s$ [mm] | Load capacity **Pull** (β ≤ 30°) $f_{ci} = 15$ N/mm² [kN] | **Diagonal pull** (β > 30°) $f_{ci} = 15$ N/mm² [kN] | **Pull / Diagonal pull** $f_{ci} = 25$ N/mm² [kN] |
|---|---|---|---|---|---|---|---|---|---|---|---|
| 2,5 | TPA-FP 1,4 - 5 | 55 | 85 | 115 | 230 | 2 × 131 | 8 | 200 | 14.0 | 11.2 | 14.0 |
| | TPA-FP 2,5 - 8 | 80 | 110 | 165 | 330 | 2 × 131 | 10 | 300 | 25.0 | 20.0 | 25.0 |
| 5,0 | TPA-FP 5,0 - 12 | 120 | 150 | 240 | 480 | 2 × 131 | 12 | 450 | 50.0 | 40.0 | 50.0 |
| 10,0 | TPA-FP 10,0 - 16 | 160 | 195 | 330 | 660 | 2 × 181 | 16 | 600 | 100.0 | 80.0 | 100.0 |


© 2020 HALFEN · TPA 20-E · www.halfen.com

## FRIMEDA LIFTING ANCHOR SYSTEM
# TPA-FG Garage Anchor

### Dimensions TPA-FG

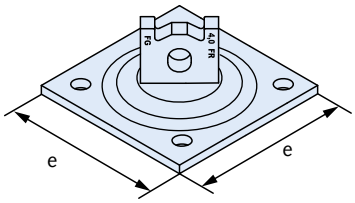


This anchor is designed for special applications, such as thin floors of prefabricated garages. The plate anchor with tilt-up anchor head permits high diagonal pull for handling elements in areas with a very restricted access height.

For axial and diagonal pull up to 45° it is mandatory that the load is reduced by 50 %.
The concrete strength at time of lifting must be at least 25 N/mm².

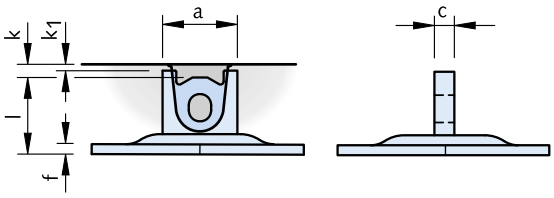


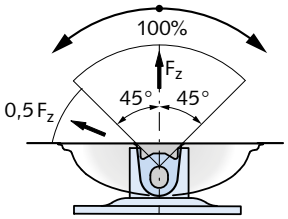


### Dimensions TPA-FG Garage anchor

| Load class lifting link | Article number | Order no. 0070.060- | a [mm] | c [mm] | l [mm] | e [mm] | f [mm] | k [mm] | $k_1$ [mm] |
|---|---|---|---|---|---|---|---|---|---|
| 5,0 | TPA-FG 4,0- 7 | 00001 | 60 | 16 | 67 | 150 | 8 | 10 | 5 |

### Load capacities, edge distances and axial additional reinforcement for thin plates

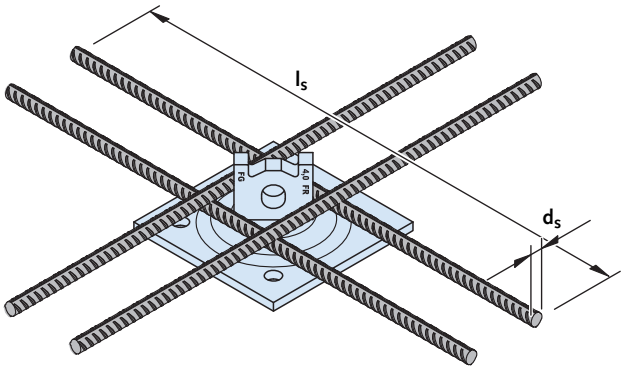


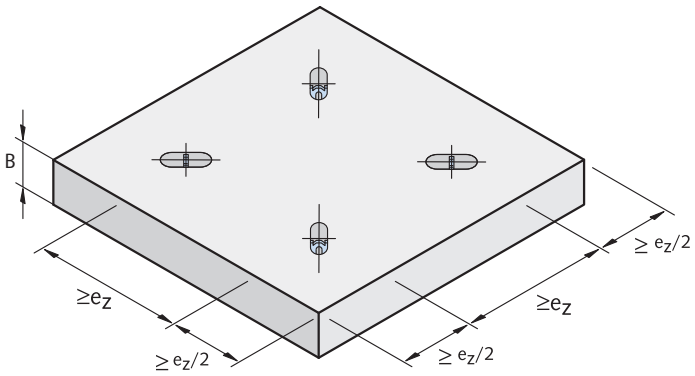


The anchors must be installed in the correct orientation as shown

### Load capacities and reinforcement

| Load class lifting link | Article number | Anchor length l [mm] | Minimum element thickness B [mm] | Axial- and diagonal pull up to 45° ① max. load capacity in [kN] at concrete strength $f_{ci} \geq 25$ N/mm² | Additional reinforcement $d_s$ [mm] | Additional reinforcement $l_s$ [mm] | Minimum edge spacing and axial anchor spacing $e_z/2$ [mm] | Minimum edge spacing and axial anchor spacing $e_z$ [mm] |
|---|---|---|---|---|---|---|---|---|
| 5,0 | TPA-FG 4,0 – 7 | 67 | 95 | 40.0 | 12 | 450 | 240 | 480 |

① β = Cable spread, for β < 45° → see text above

## FRIMEDA LIFTING ANCHOR SYSTEM
## TPA-FX Sandwich Panel Anchor

### Dimensions TPA-FX

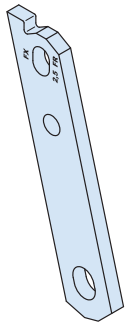

This anchor is specially designed for use with precast sandwich panels. It provides a suspension point close to the gravity axis allowing the element to be transported and erected in an upright position.
We recommend using hot-dip galvanized anchors to ensure sufficient corrosion protection.

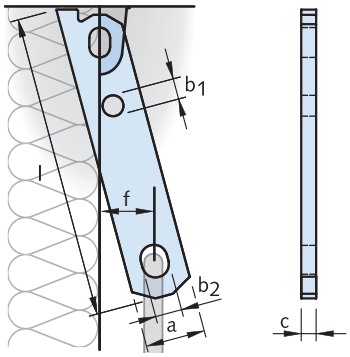


**Dimensions TPA-FX Sandwich panel anchor**

| Load class lifting link | Article number **Mill finish** | Order no. 0070.090- | Article number **Hot-dip galvanized** | Order no. 0070.090- | a [mm] | $b_1$ [mm] | $b_2$ [mm] | c [mm] | l [mm] | f [mm] |
|---|---|---|---|---|---|---|---|---|---|---|
| 2,5 | TPA-FX 2,5-25 | 00001 | TPA-FX 2,5-25 FV | 00006 | 40 | 14 | 18 | 10 | 250 | 48 |
| 5,0 | TPA-FX 5,0-30 | 00002 | TPA-FX 5,0-30 FV | 00007 | 60 | 17.5 | 26 | 16 | 300 | 53 |
| 10,0 | TPA-FX 7,5-35 | 00003 | TPA-FX 7,5-35 FV | 00008 | 80 | 25 | 35 | 16 | 350 | 55 |
| | TPA-FX 10,0-35 | 00004 | TPA-FX 10,0-35 FV | 00009 | | | | 20 | | |
| 26,0 | TPA-FX 17,0-40 | 00005 | TPA-FX 17,0-40 FV | 00010 | 100 | 30 | 35 | 20 | 400 | 66 |

**Face-down production (Standard)**

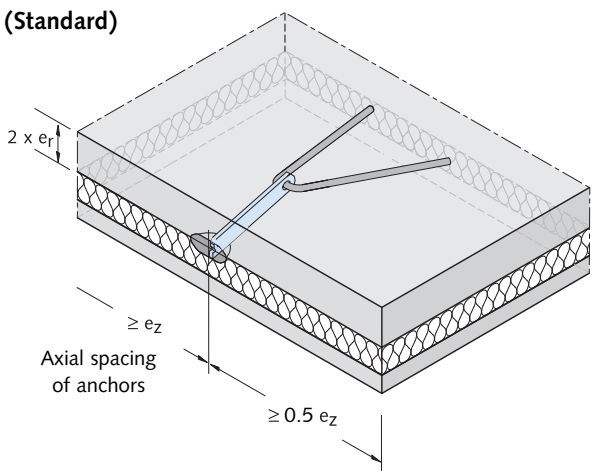


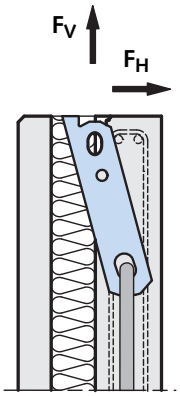


The specially designed slanted head of the TPA-FX Sandwich panel anchor can be inserted close to the gravity axis in large, precast concrete sandwich panels.
The panel hangs nearly upright during transport and installation.
The head shape is compatible with the HALFEN TPA Accessories range.

**Face-up production**

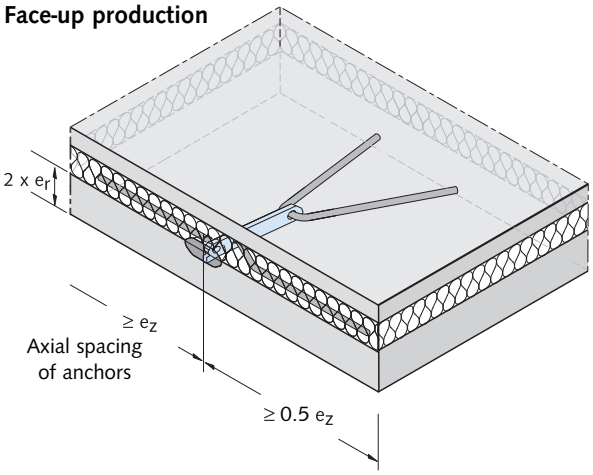


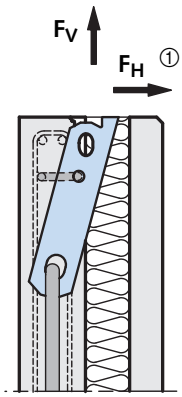


① tilt-up reinforcement required, if $F_H$ is in the direction of the facing layer, i.e. with face-up producted elements


© 2020 HALFEN · TPA 20-E · www.halfen.com

## FRIMEDA LIFTING ANCHOR SYSTEM
## TPA-FX Sandwich Panel Anchor

### Additional reinforcement TPA-FX

Tilt-up reinforcement ①

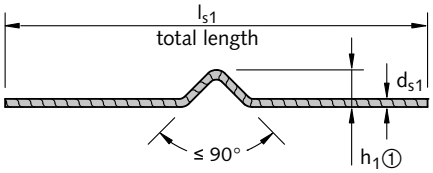


- Reinforcing steel B500B
- Bending radii acc. to DIN EN 1992

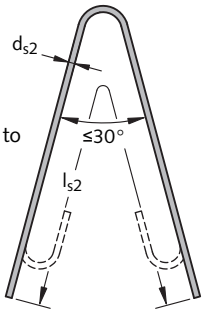


Additional reinforcement for pull

② $h_1$ = thickness of the element, but at least as in the table

### Element dimensions, additional reinforcement and load capacities

| Load class lifting link | Article number | Minimum distances: Element thickness load bearing inner slab 2 × $e_r$ [mm] | Minimum distances: Minimum axial anchor spacing $e_z$ ④ [mm] | Reinforcement: Stirrup for pull B500B (see page 24) Ø × length [mm] | Reinforcement: Tilt-up reinforcement③ (not included in delivery) $d_{s1}$ [mm] | Tilt-up reinforcement: $l_{s1}$ [mm] | Tilt-up reinforcement: $h_1$ ② [mm] | Additional reinforcement for pull③ (not included in delivery) $d_{s2}$ [mm] | Additional reinforcement: $l_{s2}$ [mm] | Load capacities: perm. load capacities at concrete strength $f_{ci}$ ≥ 15 N/mm²: Axial pull [kN] | Load capacities: Transverse pull [kN] |
|---|---|---|---|---|---|---|---|---|---|---|---|
| 2,5 | TPA-FX 2,5–25 | 100 | 600 | 2 Ø 8 × 600 | 10 | 600 | ≥ 60 | 14 | 800 | 25.0 | 8.0 |
| 5,0 | TPA-FX 5,0–30 | 120 | 750 | 2 Ø 8 × 800 | 14 | 700 | ≥ 80 | 16 | 1200 | 50.0 | 18.0 |
| 10,0 | TPA-FX 7,5–35 | 130 | 1200 | 2 Ø 10 × 800 | 16 | 800 | ≥ 100 | 25 | 1400 | 75.0 | 26.0 |
| | TPA-FX 10,0–35 | 140 | 1200 | 4 Ø 10 × 800 | 20 | 900 | ≥ 120 | 25 | 1800 | 100.0 | 35.0 |
| 26,0 | TPA-FX 17,0–40 | 180 | 1500 | 4 Ø 12 × 1200 | 20 | 1100 | ≥ 140 | 28 | 2500 | 170.0 | 50.0 |

③ To ensure adequate corrosion protection, we recommend hot-dip galvanized additional reinforcement.
④ The loads in diagonal pull must be reduced to 80% – irrespective of concrete strengths. In general diagonal pull should be avoided.

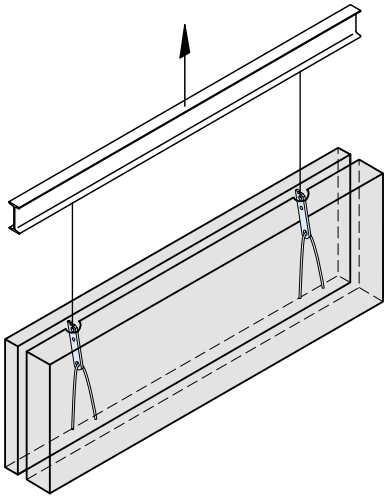

When using TPA-FX Anchors for tilt-up and transport we recommend using a spreader beam. This helps to prevent spalling of the concrete when tilting, transporting or installing.

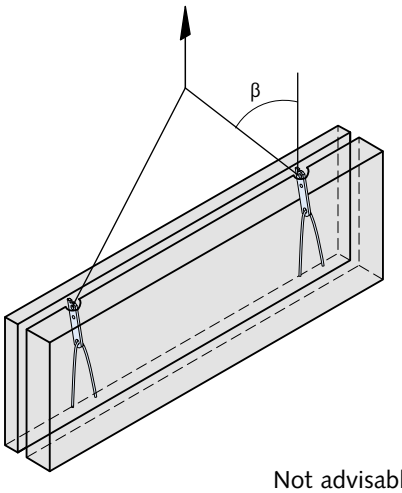


Not advisable
(diagonal pull with β >30° is not permitted)

Diagonal pull only permitted with concrete strength $f_{ci}$ ≥ 25 N/mm² and β ≤ 30°.

## FRIMEDA LIFTING ANCHOR SYSTEM
# TPA-FD Double-Head (Column) Anchor

### TPA-FD Double-head (column) anchor

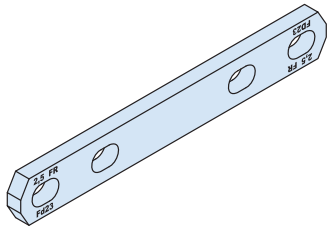

This anchor is similar to the head of the two-hole anchor.
The TPA-FD Anchor was specially developed for lifting rectangular columns. For round profiled columns or for small edge distances we recommend installing the TPA-FA tilt-up anchor.

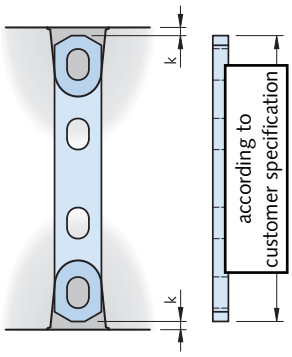


### Allowable loads: TPA-FD Double-head (column) anchor

| Load class lifting link | Article number | Allowable column weight for $f_{ci}$ ≥ | | Element thickness②/ minimum distances | | | | Reinforcement | |
|---|---|---|---|---|---|---|---|---|---|
| | | 15 N/mm² | 25 N/mm² | $a_s$② | $b_s$② | $e_s$ | k | $d_s$ | $l_s$ |
| | | [kN] | [kN] | [mm] | [mm] | [mm] | [mm] | [mm] | [mm] |
| 2,5 | TPA-FD 2,5-L① | 40.0 | 50.0 | 150 | 180 | 300 | 10 | 12 | 750 |
| 5,0 | TPA-FD 5,0-L | 80.0 | 100.0 | 190 | 300 | 400 | 10 | 16 | 1000 |
| 10,0 | TPA-FD 7,5-L | 120.0 | 150.0 | 250 | 400 | 500 | 15 | 20 | 1200 |
| | TPA-FD 10,0-L | 160.0 | 200.0 | 300 | 500 | 500 | 15 | 25 | 1500 |
| 26,0 | TPA-FD 12,5-L | 200.0 | 250.0 | 400 | 600 | 800 | 15 | 25 | 1500 |
| | TPA-FD 17,0-L | 272.0 | 340.0 | 400 | 700 | 800 | 15 | 28 | 1600 |
| | TPA-FD 22,0-L | 352.0 | 440.0 | 475 | 800 | 800 | 15 | 28 | 2000 |

① The length of the TPA-FD is according to the customer's specification.
Anchor length l = column dimension $a_s$ minus 2 × anchor head cover k.
Article number: 0070-089-00001

② Dimension $a_s$ is a minimum dimension; this dimension **must not** fall below this value.
The dimension $b_s$ can be further reduced if there is a reduction in the load capacity or if lifting adhesion is higher. (Contact us for more detailed information. For contact information → see back cover).

### Lifting / Tilt-up columns

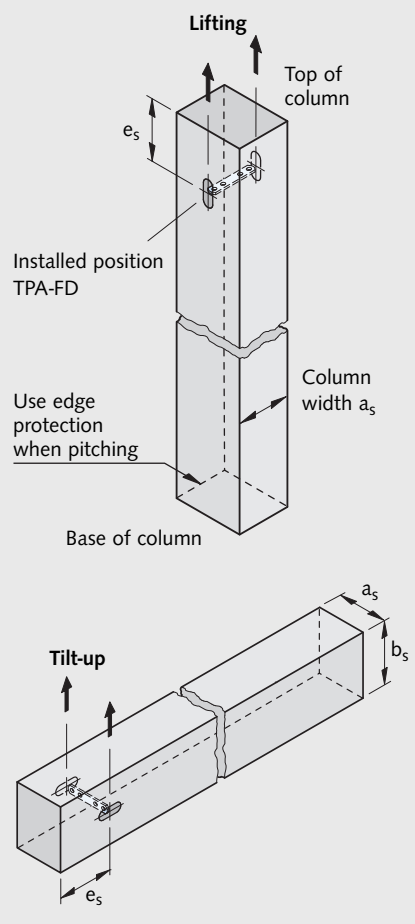


### Required additional reinforcement

Recess former are used at both ends of the anchor. The anchor and recess former assembly is then passed between the reinforcement bars and fastened to the formwork at both ends. The additional reinforcement bars are then pushed through the holes of the anchor and wired in place.

Additional reinforcement as for the two-hole anchor.

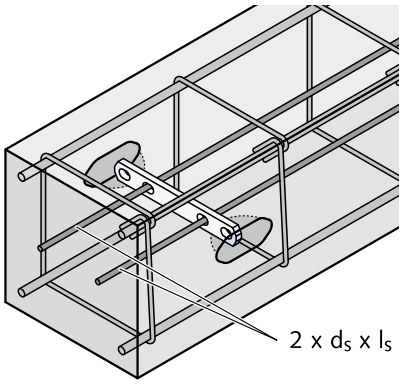


The larger the dimension $e_s$, the greater the load on the anchor when tilting, but the lower the load on the edge at the base of the column.


© 2020 HALFEN · TPA 20-E · www.halfen.com

## FRIMEDA LIFTING ANCHOR SYSTEM
## FRIMEDA Recess Former – Installation and Application

### Recess former

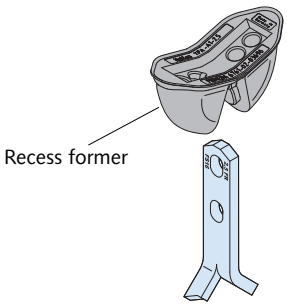


The plastic recess formers are used for easy attachment to the formwork.

**Installation**

- the open recess former is placed over the anchor head
- close the recess former to secure the anchor
- the recess former and the anchor are then fixed to the formwork

### Holding plates

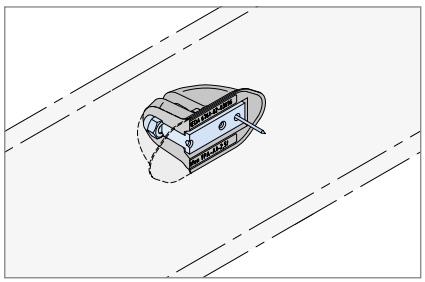

The TPA-H1 Holding plate consists of a baseplate with two bolts. Two or four nail holes are provided in the baseplate.

The plate can either be nailed or welded. The recess former is easily fitted onto the bolts for installation.

The holding plate has no screw-thread.

This allows the formwork to be simply pulled off without first having to remove the plate.

### TPA-A4 Recess former

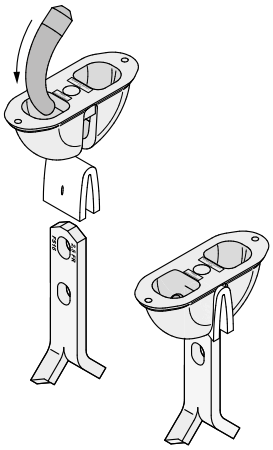

The anchor head is pressed into the TPA-A Z01 Foam strips and secured in the recess former using the TPA-A E01 Wedge as shown above.
The wedge is easily removed to release the recess former.
The recess former can then be removed in a vertical direction.

**Installation**

- the lifting anchors are fixed to the formwork with recess formers of the same load group
- apply formwork oil to the exposed surfaces of recess formers
- insert or place additional reinforcement
- required transverse load reinforcement is always applied opposite to the load force direction

### TPA-S1 Holding bolts

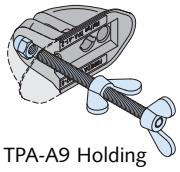

TPA-A1 TPA-A9 Holding bolt with thread

The **TPA-S1 Holding bolt with** thread is used for fixing the recess former. The bolt has a fixed wing-nut at one end. A second, identical, freely adjustable wing-nut is screwed onto the thread.

### TPA-S2 Holding bolt

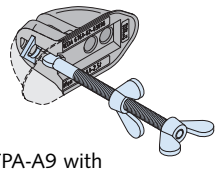

TPA-A1 TPA-A9 with bayonet holding bolt

The TPA-S2 **Bayonet holding bolt** consists of a threaded holding bolt with a bayonet fitting.

**Installation**

- the bayonet holding bolt is inserted into the bayonet connection of the recessed unit, and then turned 90°
- the upper wingnut should now be at right-angles to the lengthwise direction of the recessed unit
- the recess former is then secured against the formwork with the second wing nut

## FRIMEDA LIFTING ANCHOR SYSTEM
# Holding Plates and Holding Bolts – Installation and Application

### Notes on anchor installation

Only careful installation of the anchors guarantees their correct function and optimal safety in lifting.
Always use the available installation accessories for all applications.

The A1 recess former is easily removed from the hardened concrete element, if it has been sufficiently greased before concreting. **We recommend not nailing the recess former to the formwork if this can be avoided.**

### Floating installation

Application: columns, beams, trusses, π-slabs
Installation aid: **H2 Holding plate**

**Installation:**
Open up the A1 Recess former ② insert the anchor①, press the H2 Holding plate ③ into the recess former and press into the wet concrete.

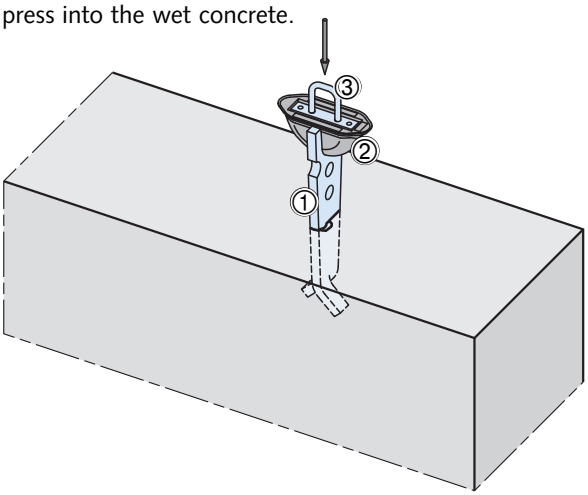


### Installation to formwork (wood/steel)

Installation aid: **S1 or S2 Holding bolt**

**Installation:**
Drill through the formwork, push the S1 or S2 Holding bolt through the hole ⑤, screw into the A1 Recess former ②, with the anchor inserted①, pull towards the formwork and tighten securely against the formwork with the second wing nut.

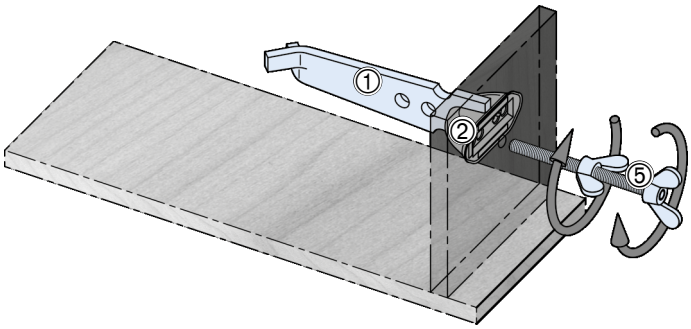


### Installation to formwork (steel)

Installation accessory: **HM Magnetic plate**

**Installation:**
The magnetic holding plate⑥ is placed and secured at the correct position on the formwork. Press the A1 Recess former ②, with the anchor inserted① onto the pins.

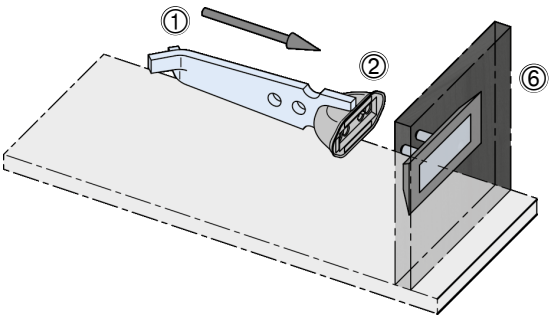


### Installation to formwork (wood)

Installation accessory: **H1 Holding plate**

**Installation:**
Nail or screw the H1 Holding plate ④ onto the formwork. Press the A1 Recess former ② with the anchor inserted①. onto the holding plate.

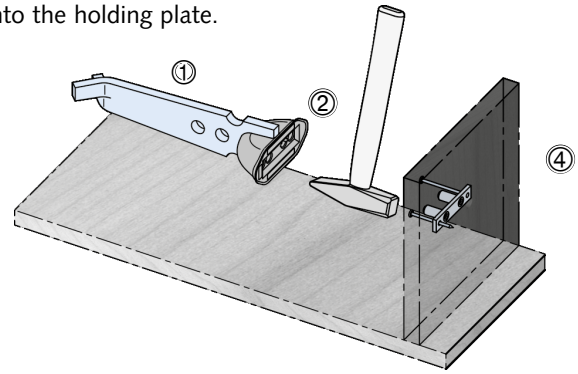



© 2020 HALFEN · TPA 20-E · www.halfen.com

## FRIMEDA LIFTING ANCHOR SYSTEM
## Accessories – Installation and Application

### TPA-V1 Recess filler (Polystyrene)

Use polystyrene recess formers to seal and fill a anchor recess in precast concrete. This protects the anchor against corrosion and also prevents water collecting and consequently freezing in cold weather.

The HALFEN TPA-V1 Recess filler can be used during transport and storage or for a permanent seal after final installation.

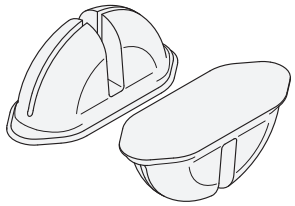

Recess filler TPA-V1

**Installation of the recess filler**
Hot-dip galvanized or stainless steel anchors can be applied, if corrosion protection is required.

If not available, two alternative methods of corrosion protection are illustrated below.

| TPA-V1 Recess filler | | |
|---|---|---|
| Load class | Article number | Order no. 0073.080- |
| 2,5 | TPA-V1 2,5 | 00001 |
| 5,0 | TPA-V1 5,0 | 00002 |
| 10,0 | TPA-V1 10,0 | 00003 |

- **Method 1:** The recess in the precast element is filled with mortar.
- **Method 2:** The polystyrene (TPA-V1) recess filler is placed over the anchor and pressed into the recess.

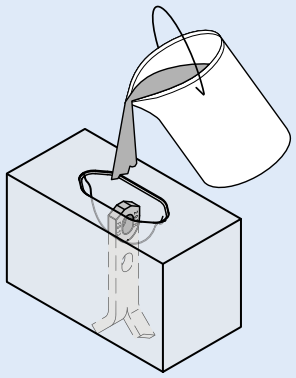

**Method 1:** Fill with mortar

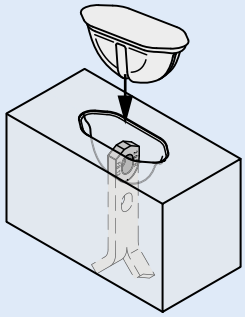

**Method 2:** With a TPA-V1

### TPA-A Z01 Foam strip (for TPA-A4 Recess former)

The anchor head is pressed into the foam strip and then inserted into the recessed TPA-A4 Recess former. Not using a TPA-A Z01 Foam strip results in concrete seeping into the recess.

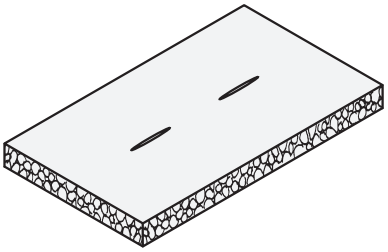

Foam strip for load classes 2,5 – 26,0

| Foam strip | | |
|---|---|---|
| Load class | Article number | Order no. 0072.120- |
| 2,5 | TPA-A-Z1 2,5 | 00006 |
| 5,0 | TPA-A-Z1 5,0 | 00007 |
| 10,0 | TPA-A-Z1 10,0 | 00008 |
| 26,0 | TPA-A-Z1 26,0 | 00009 |

### TPA-A E01 Replacement wedge (for TPA-A4 Recess former)

The wedge is used to attach the anchor to the TPA-A4 Recess former. Take the wedge out to remove the recess former. The wedge is supplied with the recess former; replacement wedges can also be ordered separately.

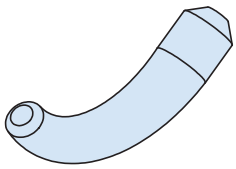

TPA-A-E1 Replacement wedge for load classes 2,5 – 26,0

| Replacement wedge | | |
|---|---|---|
| Load class | Article number | Order no. 0072.120- |
| 2,5 | TPA-A-E1 2,5 | 00002 |
| 5,0 | TPA-A-E1 5,0 | 00003 |
| 10,0 | TPA-A-E1 10,0 | 00004 |
| 26,0 | TPA-A-E1 26,0 | 00005 |

## FRIMEDA LIFTING ANCHOR SYSTEM
# Recess Formers

### TPA-A1 Plastic recess former

| Colour code | Load class | Article number | Order no. 0072.010- | e [mm] | f [mm] | h [mm] | Thread M |
|---|---|---|---|---|---|---|---|
| orange | 2,5 | TPA-A1 2,5 | 00001 | 43 | 104 | 45 | 8 |
| black | 5,0 | TPA-A1 5,0 | 00002 | 49 | 126 | 59 | 8 |
| green | 10,0 | TPA-A1 10,0 | 00003 | 67 | 188 | 85 | 12 |
| blue | 26,0 | TPA-A1 26,0 | 00004 | 112 | 234 | 118 | 16 |

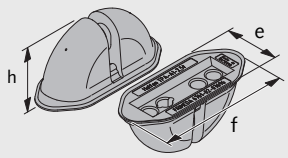


for all anchor types except FU, FG

### TPA-A2 Rubber recess former

| Colour code | Load class | Article number | Order no. 0073.020- | e [mm] | f [mm] | h [mm] |
|---|---|---|---|---|---|---|
| black | 2,5 | TPA-A2 2,5 | 00001 | 41 | 102 | 47 |
| | 5,0 | TPA-A2 5,0 | 00002 | 51 | 126 | 59 |
| | 10,0 | TPA-A2 10,0 | 00003 | 70 | 184 | 84 |

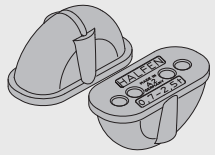

for all anchor types except FA, FE, FX, FU, FG

### TPA-A3 Rubber recess former

| Colour code | Load class | Article number | Order no. 0073.030- | e [mm] | f [mm] | h [mm] |
|---|---|---|---|---|---|---|
| black | 5,0 | TPA-A3 5,0 | 00001 | 54 | 115 | 50 |

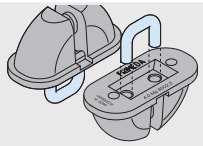

only for anchor type FG

### TPA-A4 Plastic recess former (incl. TPA-A E01)

| Colour code | Load class | Article number | Order no. 0072.040- | e [mm] | f [mm] | h [mm] | Thread M |
|---|---|---|---|---|---|---|---|
| orange | 2,5 | TPA-A4 2,5 | 00001 | 37 | 102 | 45 | 8 |
| black | 5,0 | TPA-A4 5,0 | 00002 | 48 | 126 | 59 | 8 |
| green | 10,0 | TPA-A4 10,0 | 00003 | 70 | 184 | 84 | 12 |
| blue | 26,0 | TPA-A4 26,0 | 00004 | 112 | 252 | 118 | 16 |

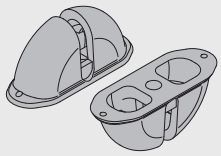

for all anchor types except FU, FG

### TPA-A7 Plastic recess former

| Colour code | Load class | Article number | Order no. 0073.070- | e [mm] | f [mm] | h [mm] |
|---|---|---|---|---|---|---|
| blue | 1,25 | TPA-A7 1,25 | 00001 | 28 | 60 | 32 |

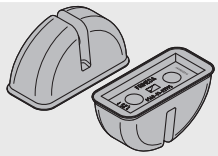

only for anchor type FU

### TPA-A8 Plastic recess former (for single-use only)

| Colour code | Load class | Article number | Order no. 0073.080- | e [mm] | f [mm] | h [mm] |
|---|---|---|---|---|---|---|
| orange | 2,5 | TPA-A8 2,5 | 00001 | 42 | 100 | 47 |

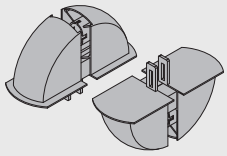

for all anchor types except FU

### TPA-A9 Plastic recess former

| Colour code | Load class | Article number | Order no. 0072.090- | e [mm] | f [mm] | h [mm] | Thread M |
|---|---|---|---|---|---|---|---|
| orange | 2,5 | TPA-A9 2,5 | 00001 | 43 | 104 | 45 | 8 |
| black | 5,0 | TPA-A9 5,0 | 00002 | 49 | 126 | 59 | 8 |
| green | 10,0 | TPA-A9 10,0 | 00003 | 67 | 188 | 85 | 12 |
| blue | 26,0 | TPA-A9 26,0 | 00004 | 112 | 234 | 118 | 16 |

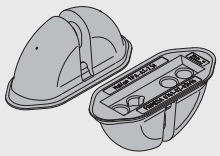

for all anchor types except FA, FE, FX, FU, FG

### TPA-AM Magnetic recess former

| Colour code | Load class | Article number | Order no. 0072.100- | e [mm] | f [mm] | h [mm] |
|---|---|---|---|---|---|---|
| orange | 2,5 | TPA-AM 2,5 | 00001 | 43 | 104 | 45 |
| black | 5,0 | TPA-AM 5,0 | 00002 | 49 | 126 | 59 |

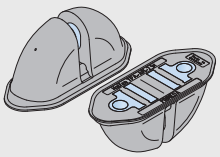

for all anchor types except FU, FG


© 2020 HALFEN · TPA 20-E · www.halfen.com

# FRIMEDA LIFTING ANCHOR SYSTEM
## Recess Formers, Accessories

### TPA-SCFS /-SCFA Plastic recess former

| Load class | Article number | Order no. 0072.150- | e [mm] | f ($f_1$/$f_2$) [mm] | h [mm] |
|---|---|---|---|---|---|
| 4,0 | TPA-SCFA-... | 00002 | 128 | 65/80 | 59 |
| 5,0 | TPA-SCFA-... | 00003 | 128 | 65/80 | 59 |
| 4,0 – 5,0 | TPA-SCFS-... | 00004 | 124 | 58 | 59 |
| 7,5 | TPA-SCFA-... | 00005 | 158 | 80/95 | 85 |

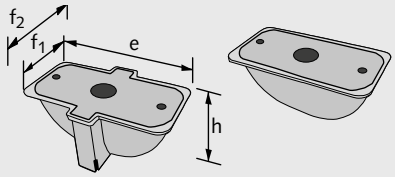


## Accessories

### TPA-H1 Holding plate (for TPA-A1, TPA-A7, TPA-A9 Recess formers)

| Load class | Article number | Order no. 0073.010- | e [mm] | f [mm] | t [mm] | d [mm] |
|---|---|---|---|---|---|---|
| 1,25 | TPA-H1 1,25 | 00001 | 40 | 15 | 3 | 8 |
| 2,5 | TPA-H1 2,5 | 00002 | 70 | 15 | 4 | 10 |
| 5,0 | TPA-H1 5,0 | 00003 | 85 | 30 | 4 | 10 |
| 10,0 | TPA-H1 10,0 | 00004 | 125 | 45 | 4 | 12 |
| 26,0 | TPA-H1 26,0 | 00005 | 175 | 65 | 4 | 16 |

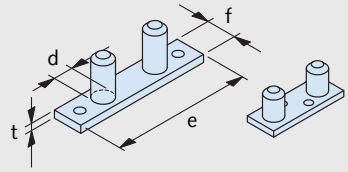


Figure: type load class 1,25

### TPA-H2 Holding plate (for floating installation of TPA-A1, TPA-A9 Recess formers)

| Load class | Article number | Order no. 0073.020- | e [mm] | f [mm] | t [mm] | d [mm] |
|---|---|---|---|---|---|---|
| 2,5 | TPA-H2 2,5 | 00001 | 70 | 15 | 4 | 10 |
| 5,0 | TPA-H2 5,0 | 00002 | 85 | 30 | 4 | 10 |
| 10,0 | TPA-H2 10,0 | 00003 | 125 | 45 | 4 | 12 |
| 26,0 | TPA-H2 26,0 | 00004 | 178 | 65 | 4 | 16 |

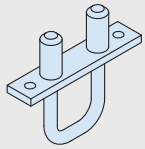

### TPA-H3 Holding plate (for TPA-A2 Recess former)

| Load class | Article number | Order no. 0073.030- | e [mm] | f [mm] | t [mm] | d [mm] |
|---|---|---|---|---|---|---|
| 2,5 | TPA-H3 2,5 | 00001 | 100 | 50 | 4 | 8 |
| 5,0 | TPA-H3 5,0 | 00002 | 120 | 60 | 4 | 8 |
| 10,0 | TPA-H3 10,0 | 00003 | 170 | 80 | 4 | 12 |

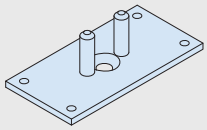

### TPA-HM Magnet holding plate (for TPA-A1, TPA-A9 Recess formers)

| Load class | Article number | Order no. 0073.050- | e [mm] | f [mm] | t [mm] | d [mm] |
|---|---|---|---|---|---|---|
| 2,5 | TPA-HM 2,5 | 00001 | 144 | 63 | 16 | 10 |
| 5,0 | TPA-HM 5,0 | 00002 | 144 | 63 | 16 | 10 |
| 10,0 | TPA-HM 10,0 | 00003 | 220 | 125,5 | 16 | 12 |

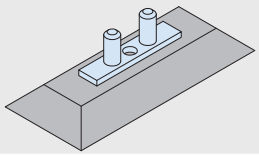

### TPA-S1 Holding bolt with wing nut (for TPA-A1, TPA-A2, TPA-A7, TPA-A9 Recess formers and TPA-H3 Holding plate)

| Load class | Article number | Order no. 0073.060- | l [mm] | M |
|---|---|---|---|---|
| 1,25 | TPA-S1 M8 | 00001 | 160 | M8 |
| 2,5 | | | | |
| 5,0 | | | | |
| 10,0 | TPA-S1 M12 | 00003 | 160 | M12 |
| 26,0 | TPA-S1 M16 | 00004 | 180 | M16 |

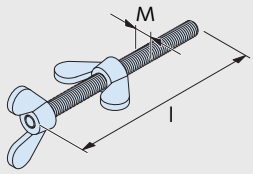


### TPA-S2 Bayonet holding bolt (for TPA-A1, TPA-A9 Recess formers)

| Load class | Article number | Order no. 0073.070- | l [mm] | a [mm] | M |
|---|---|---|---|---|---|
| 2,5 | TPA-S2 M8 | 00001 | 160 | 11 | M8 |
| 5,0 | | | | | |
| 10,0 | TPA-S2 M12 | 00002 | 180 | 16 | M12 |
| 26,0 | | | | | |

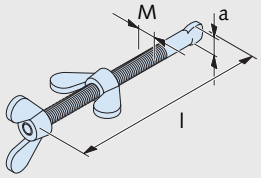

## FRIMEDA LIFTING ANCHOR SYSTEM
# TPA Ring Clutches – Application

**FRIMEDA Ring clutch: Application instructions**

### Removing formwork sections
Before lifting the precast concrete element, as many sections of the formwork as possible should be removed to minimise adhesion to the formwork. Inadequate removal of formwork is the most common cause of flaking in precast concrete elements and anchor failure. Otherwise the forces acting on the lifting system can be several times the actual weight of the precast element.

### Attaching the ring clutch
When transporting an element the appropriate ring clutch for the load group is inserted over the anchor head in the concrete recess. Selecting the wrong ring clutch for the load class is not possible.

### Tilt-up of slabs without a tilt-up table
The FRIMEDA Lifting anchor system can be used to lift horizontal manufactured precast elements from the horizontal to the vertical. The load direction is at right-angles to the cast-in anchor. To avoid damage to the concrete the TPA-FA Tilt-up anchor should be installed in the precast element.

### Attaching the lifting devices
A main benefit of the FRIMEDA Lifting anchor system is that the clutch (ring clutches) remain attached to the crane hook and doesn't need to be moved by hand. When not subjected to load, the ring clutch can be released manually by pushing back the locking bolt.

### Removing the recess formers
Two rods are inserted in the holes in the recess former, which is removed from the concrete using a scissor motion. Using only this technique maximize the life span of the recess former. Attempting to remove the recess former using a hammer claw or other sharp tools will damage the recess former.

### Securing the ring clutch
The ring clutch is securely locked by hand; push the locking bolt fully down to the concrete. The resulting connection is secure, and the ring clutch free to move in any direction. The precast element can be lifted out of the formwork and transported safely to its point of storage.

| Load class ring clutch | Load class anchor |
|---|---|
| 1,25 | 1,25 |
| 2,5 | 1,4 |
| | 2,5 |
| 5,0 | 4,0 |
| | 5,0 |
| 10,0 | 7,5 |
| | 10,0 |
| 26,0 | 12,5 |
| | 14,0 |
| | 17,0 |
| | 22,0 |
| | 26,0 |

Removing a recess former using a scissor motion.

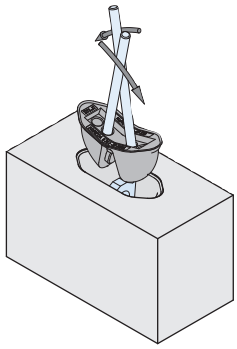

Locking the ring clutch by hand.

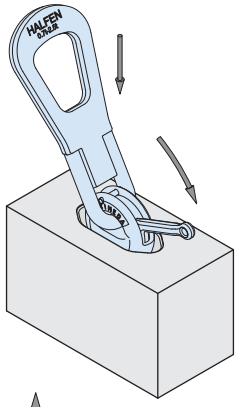

Lifting precast elements from the horizontal to the vertical.

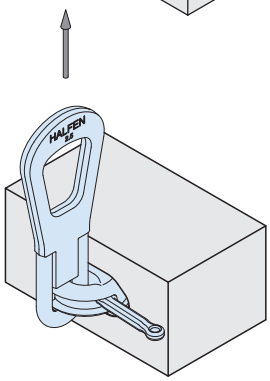

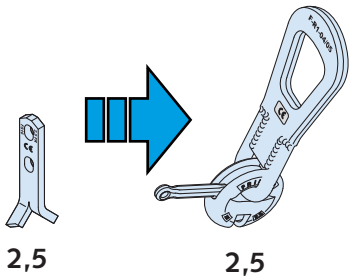


Only the correct lifting link fits into the appropriate anchor!



© 2020 HALFEN · TPA 20-E · www.halfen.com

## FRIMEDA LIFTING ANCHOR SYSTEM
# TPA Ring Clutches – Application

### Correct use of the FRIMEDA R1 Ring clutch

**1. Engaging**
Insert the ring clutch in the recess in the concrete and close the locking bolt (the latch) manually, pushing it fully down to the concrete. The element can now be lifted.

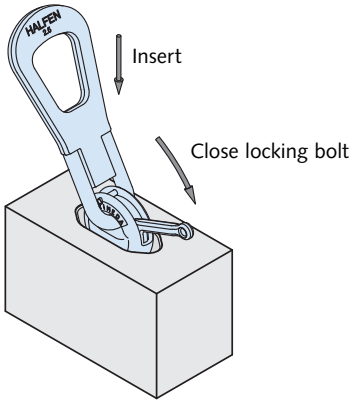


**2. Handling**
The ring clutch can be subjected to loads in any direction (do not exceed the load limits of the anchors!).

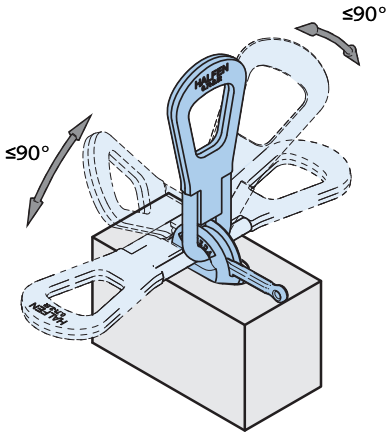


**3. Disengaging**
Manual ring clutch: push the bolt back by hand. The ring clutch is now disengaged.

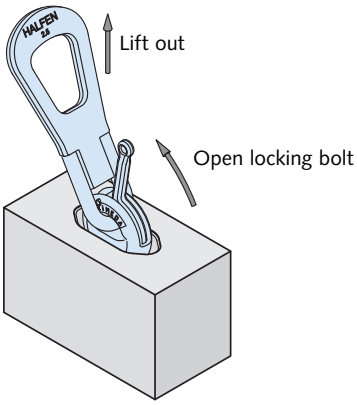


### In-correct application of the FRIMEDA Ring clutch

**✗ Shackle is restricted**
If the shackle is caught under the clutch head when subjected to load, it may lock in the position illustrated. The shackle will deform when subjected to load.

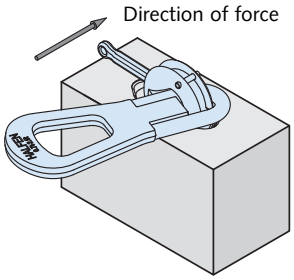


**Problem:** Shackle is restricted

**✗ Edge of slab shackle damage**
If the shackle is pulled towards the top surface of the slab when subjected to load it may bend at the slab edge.

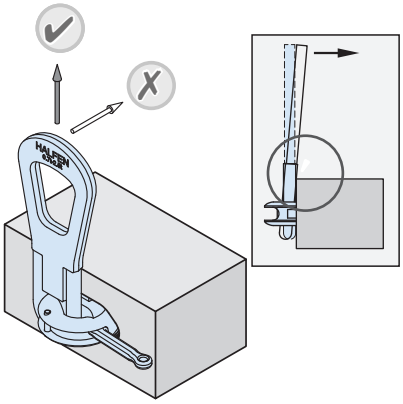

**Problem:** Shackle will bend at this point and cause damage

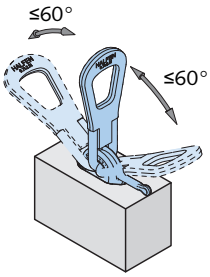


**Attention!**
Diagonal pull caused by cable/chain spread is permitted up to 60°.

**✗ Clutch blocks the shackle**
In the upper position, the shackle can lock in the clutch. A small lifting cable angle will cause the shackle to bend. The problem is prevented by turning the shackle through approx. 45°.

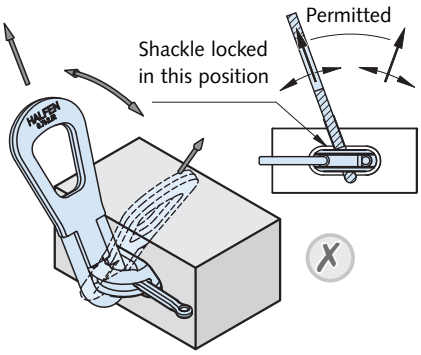


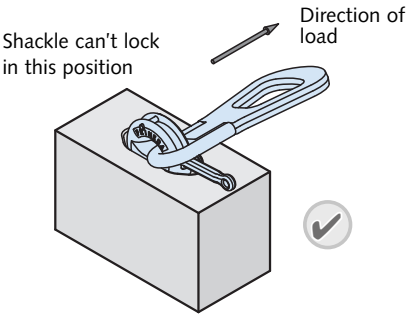

## FRIMEDA LIFTING ANCHOR SYSTEM
# TPA, TPA-R1 Ring Clutch

### TPA-R1 Ring clutch with shackle for manual release

The ring clutch consists of a shackle and a clutch head. The shackle is freely moveable in all directions. The clutch head incorporates a locking bolt that engages in an anchor, which is cast in a recess in the concrete. The locking bolt is corrosion protected.

The allowable loads for each application are selected from the respective table for the anchor type.
All lifting link safety regulations in the country of use must always be observed, in particular those for the use of cranes and lifting equipment.

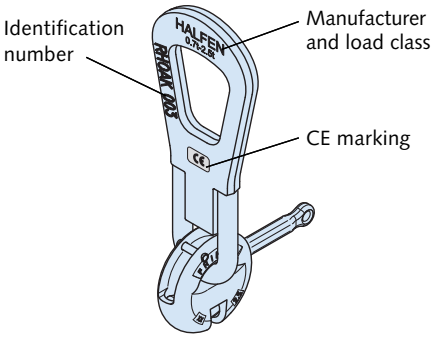


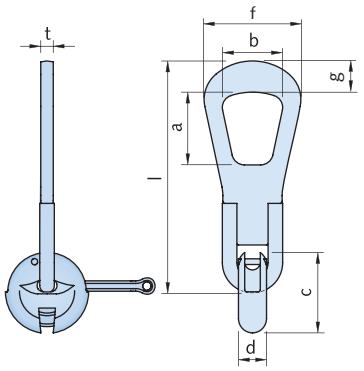


**TPA-R1**

| Load class | Article number | Order no. 0071.010- | l [mm] | a [mm] | b [mm] | c [mm] | d [mm] | t [mm] | f [mm] | g [mm] | Weight [kg] |
|---|---|---|---|---|---|---|---|---|---|---|---|
| 2,5 | TPA R1 2,5 | 00001 | 225 | 70 | 58 | 80 | 27 | 12 | 93 | 30 | 1.6 |
| 5,0 | TPA R1 5,0 | 00002 | 275 | 86 | 65 | 105 | 36 | 16 | 114 | 40 | 3.6 |
| 10,0 | TPA R1 10,0 | 00006 | 350 | 112 | 90 | 150 | 50 | 25 | 148 | 50 | 9.2 |
| 26,0 | TPA R1 26,0 | 00007 | 500 | 160 | 120 | 206 | 72 | 30 | 208 | 70 | 25.9 |

### Ring clutches with cable loops TPA-R2 (for load classes 1,25 / 2,5 / 5,0 / 10,0) TPA-R3 (for load class 26,0)

As with all other lifting and hoisting systems, ring clutches with cable loops are subject to inspection by experts to ensure safe application at least once a year. Any damaged cables must be discarded in strict accordance with the relevant accident prevention regulations for lifting equipment.

If required, worn cable loops with ferule can be replaced by HALFEN as the clutch head generally have a much longer life-span than the cable loops.

The allowable loads for each application are selected from the respective table for the anchor type.
Lifting link safety regulations in the country of use must always be observed, in particular those for the use of cranes and lifting equipment.

**TPA-R2** load class 1,25 – 10,0

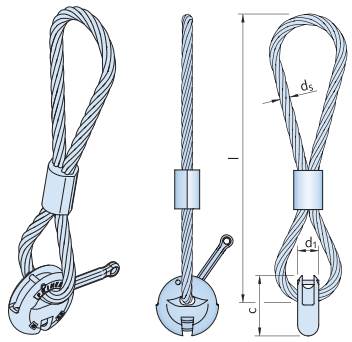


**TPA-R3** load class 26,0

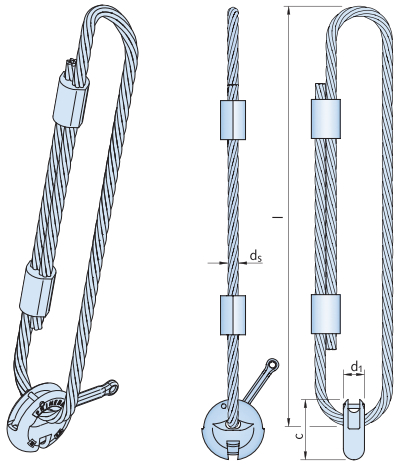


**TPA-R2 / TPA-R3**

| Load class | Article number | Order no. 0071.020- | l [mm] | c [mm] | $d_1$ [mm] | $d_S$ [mm] | Weight [kg] |
|---|---|---|---|---|---|---|---|
| 1,25 | TPA R2 1,25 | 00001 | ~320 | 52 | 20 | Ø 8 | 0.4 |
| 2,5 | TPA R2 2,5 | 00002 | ~560 | 80 | 27 | Ø 14 | 1.8 |
| 5,0 | TPA R2 5,0 | 00003 | ~595 | 105 | 36 | Ø 18 | 3.5 |
| 10,0 | TPA R2 10,0 | 00006 | ~702 | 150 | 50 | Ø 22 | 7.8 |
| 26,0 | TPA R3 26,0 | 00007 | ~1570 | 206 | 72 | Ø 32 | 25.0 |


© 2020 HALFEN · TPA 20-E · www.halfen.com

## FRIMEDA LIFTING ANCHOR SYSTEM

# TPA, TPA-R2, TPA-R3 Ring Clutches / Limit Values, Checking the Anchor

### Tolerances for the TPA-R1 Ring clutch

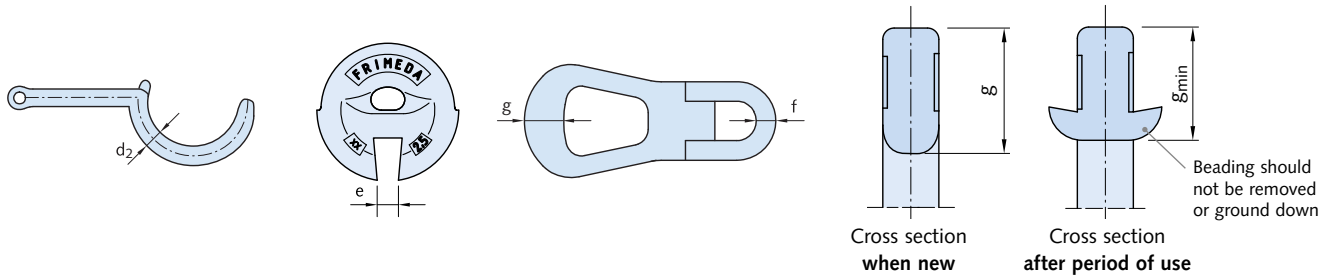


| Load class | Nominal dimension $d_2$ [mm] | Minimum dimension $d_2$ [mm] | Nominal dimension e [mm] | Maximum dimension e [mm] | Nominal dimension f [mm] | Minimum dimension f [mm] | Nominal dimension g [mm] | Minimum dimension $g_{min}$ [mm] |
|---|---|---|---|---|---|---|---|---|
| 1,25 | 8.0 +0.4/−0.6 | 7 | 7.0 ±0.12 | 8 | – | – | – | – |
| 2,5 | 13.0 +0.7/−0.4 | 12 | 12.0 ±0.5 | 14 | 14 ± 0.4 | 12.5 | 30 | 22.5 |
| 5,0 | 16.5 +0.7/−0.4 | 15 | 18.0 +0.5/−1.0 | 20 | 20 ± 0.6 | 18.5 | 40 | 30 |
| 10,0 | 23.5 +0.8/−0.4 | 22 | 22.0 ±0.5 | 24 | 26 ± 0.8 | 24 | 50 | 40 |
| 26,0 | 32.0 +0.9/−0.5 | 30.5 | 34.0 +2.0/−1.0 | 38 | 40 ± 1.0 | 38 | 70 | 56 |

These dimensions are valid for clutches with shackle and with wire cables.

Bent shackles must not be straightened. The FRIMEDA Ring clutch has to be discarded if the shackle has a significant deflection.

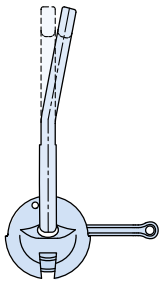

Figure: Significant bending of the shackle caused by misuse of a TPA Ring clutch

### Checking the connection fittings

**Wire cables (TPA-R2/R3)**

Wire cables should be checked for the following defects:

- kinking and buckling
- broken cable braid
- slackening of the outermost exposed layer in a free length
- compressive deformation
- compression in the loop with more than four broken wires in braided cables, or more than ten broken wires in cable-laid items
- corrosion scarring
- damage or severe wear to the cable connector or cable-end connector
- high number or broken wires

**Discarding the cable**

| Cable type | Discard the cable if the following number of broken wires is visible over a cable length of: | | |
|---|---|---|---|
| | $3\,d_S$ | $6\,d_S$ | $30\,d_S$ |
| Strand cable | 4 | 6 | 16 |

Wire cable inspections include checking for signs of cable slippage in the ferule. Acids, alkalis and other aggressive media that can cause corrosion must be kept away from cables.
Cable loops should preferably be used with crane hooks with large section diameter. Sharp-edged hooks or hooks with small cross-section and therefore small radii will damage the cable loops.

Clutch heads with worn cable loops can be re-pressed by HALFEN as the clutch heads generally have a longer service life than the cable loops.

## FRIMEDA LIFTING ANCHOR SYSTEM
# TPA-F1 TPA Ring Clutches

### TPA-F1 Ring clutch with pneumatic release

**Operating principle**
The pneumatically operated remote-control release mechanism has been designed as an alternative to the manual release for distances of more than 10 metres. On the pneumatic version, the locking bolt is released using compressed air.
The compressed air (max. 7 bar) can be supplied from any suitable source, e. g. a site compressor or a portable unit. A hand valve in the air-feed line allows the ring clutch to be opened (Dead man's switch). Further air-feed lines can be connected; this depends on the number of ring clutches in use.

**Operating sequence**
The ring clutch is inserted in the concrete recess and engaged by closing the locking bolt by hand. The precast element can now be lifted. To disengage the clutch (e.g. after installing concrete columns) the hand valve is opened, allowing compressed air into the cylinder pushing the locking bolt back to open the clutch. There is no risk of unintentional release, as the locking bolt remains closed in the event of air supply failure.
The air cylinder for the system was selected to prevent bolt release if the attached load is greater than 0.2 t.
Compressed air is only released if the key in the hand valve is turned in the direction of the arrow and held in the open position.

As soon as the key is released, even if it still in the keyhole, the valve is automatically closed and the air in the feed-line can escape. To ensure satisfactory operation we recommend that the air-feed lines to the cylinders are installed in the crane or crane jib.
If the compressed air is fed to the precast unit directly from ground level, the air-feed between the compressor and the remote control may only be connected when it is time to release the clutch; e.g. when a column is in its final position and secured.

Remote-release ring clutches have the same markings as manual ring clutches.

| TPA-F1 | | | |
|---|---|---|---|
| Load class | Article number | Order no. 0071.030- | Weight [kg] |
| 2,5 | TPA-F1 2,5 | 00001 | 3.0 |
| 5,0 | TPA-F1 5,0 | 00002 | 6.0 |
| 10,0 | TPA-F1 10,0 | 00003 | 13.7 |
| 26,0 | TPA-F1 26,0 | 00004 | 37.5 |

**According to the instructions on page 53 all lifting devices have to be regularly checked!**

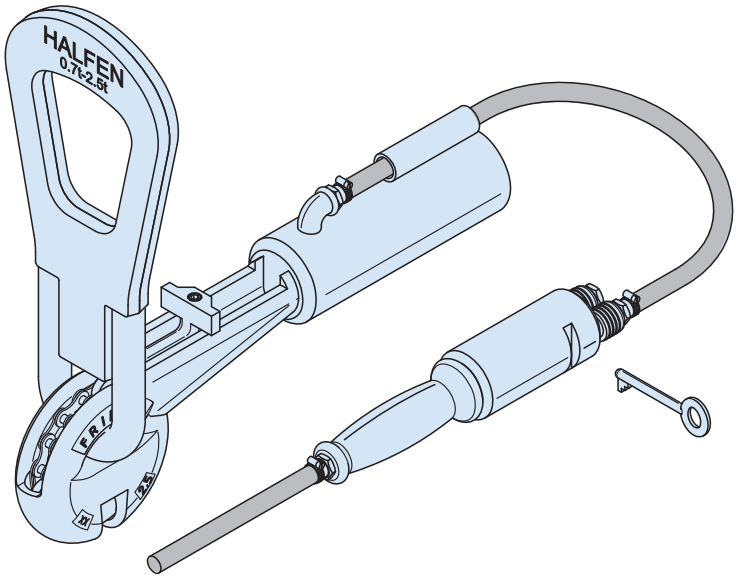



© 2020 HALFEN · TPA 20-E · www.halfen.com

## FRIMEDA LIFTING ANCHOR SYSTEM
# TPA, TPA-F1 Ring Clutches

### TPA-F1 Accessories

**Design**
Single lift

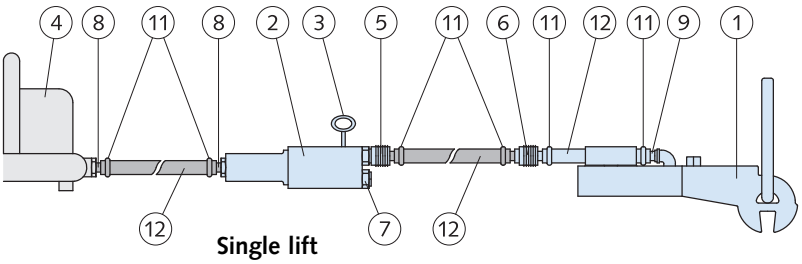


**Design**
Double lift

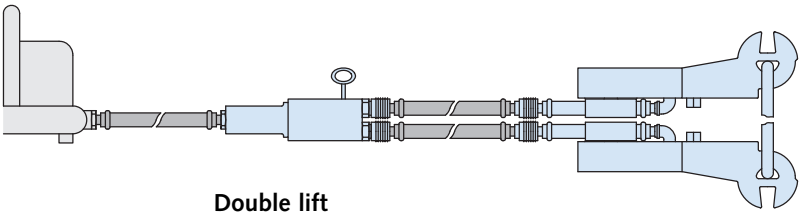


**Design**
Four-point lift

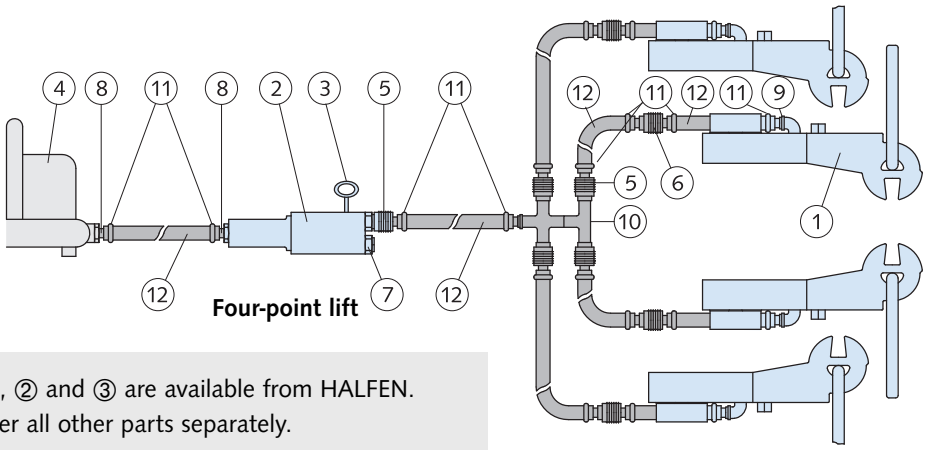


Articles ①, ② and ③ are available from HALFEN.
Please order all other parts separately.

### Accessories

| Position | Description | Order no. 0071.070- | Accessories required for: | | |
|---|---|---|---|---|---|
| | | | Single lift | Double lift | Four-point lift |
| ① | **Ring clutch; complete** | see page 54 | 1 | 2 | 4 |
| ② | **Hand valve** | 00004 | 1 | 1 | 1 |
| ③ | **Key** | 00005 | 1 | 1 | 1 |
| ④ | Compressor | – | 1 | 1 | 1 |
| ⑤ | Quick-action hose coupler R 1/4" | – | 2 | 2 | 5 |
| ⑥ | as position 5, but dual hose | – | 2 | 2 | 4 |
| ⑦ | Thread plug R 1/4" | – | - | - | 1 |
| ⑧ | Coupler R 3/8" | – | 2 | 2 | 2 |
| ⑨ | Coupler R 1/4" | – | 2 | 2 | 4 |
| ⑩ | 4-way distributor | – | - | - | 1 |
| ⑪ | Hose clip | – | 6 | 10 | 20 |
| ⑫ | Fabric hose | – | as required | as required | as required |

## FRIMEDA LIFTING ANCHOR SYSTEM
# TPA, TPA-F2 Ring Clutches

### TPA-F2 Ring clutch with Bowden cable, manual remote control

**Operating principle**
The remote-control is used to open the ring clutch from a safe distance of up to 10 metres. A Bowden cable connected to the locking bolt at the ring clutch serves as a release mechanism. At the opposite end, the release handle is secured to the tube with a safety catch. All TPA-F2 Clutch heads in the various load groups have the same M27 thread, i.e. the remote-control mechanism fits any clutch head. The opening and closing mechanism, comprising of the locking bolt, the shackle with indicator and the latch are parts of the clutch head.

**Operation of the manual remote-control**
To release the ring clutch, disengage the handle by pressing and turning. Unintentional release is not possible. For safety and efficiency reasons, the locking bolt is closed by hand. The remote device is designed so the locking bolt cannot be closed remotely. The flexible tube can withstand reasonable tension and compression loads, so that the precast unit is easily handled.

The ring clutches of all the load groups can be used with any of the manual remote-control releases of 2.5 m, 5.0 m, 7.5 m and 10.0 m lengths.

| TPA-F2 | | | | |
|---|---|---|---|---|
| Load class | Article number | Order no. 0071.040- | Cable length [m] | Weight [kg] |
| 2,5 | TPA-F2 2,5 | 00001 | 2.5 | 5.4 |
| | | 00002 | 5.0 | 6.5 |
| | | 00003 | 7.5 | 8.9 |
| | | 00004 | 10.0 | 10.6 |
| 5,0 | TPA-F2 5,0 | 00005 | 2.5 | 8.0 |
| | | 00006 | 5.0 | 9.1 |
| | | 00007 | 7.5 | 11.5 |
| | | 00008 | 10.0 | 13.2 |
| 10,0 | TPA-F2 10,0 | 00009 | 2.5 | 15.2 |
| | | 00010 | 5.0 | 16.3 |
| | | 00011 | 7.5 | 18.7 |
| | | 00012 | 10.0 | 20.4 |
| 26,0 | TPA-F2 26,0 | 00013 | 2.5 | 37.5 |
| | | 00014 | 5.0 | 38.6 |
| | | 00015 | 7.5 | 41.0 |
| | | 00016 | 10.0 | 42.7 |

**According to the instructions on page 53 all ifting devices have to be regularly checked!**

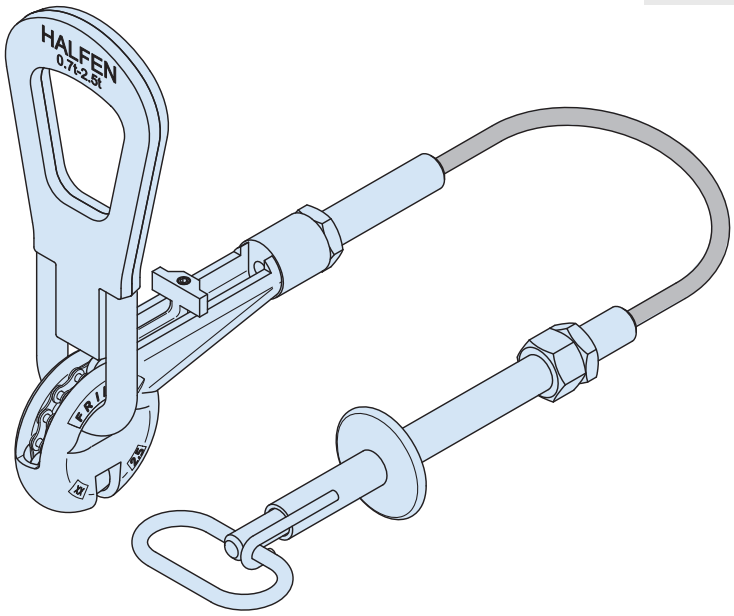



© 2020 HALFEN · TPA 20-E · www.halfen.com

## FRIMEDA LIFTING ANCHOR SYSTEM
# TPA, TPA-F2 Ring Clutches

### Component parts for TPA-F2

All clutch heads in the various load groups have an M27 inner thread; this allows connection of different cables lengths and various clutch heads to the remote-control mechanism.

This allows the individual components of the remote-control mechanism to be ordered separately; and also helps to reduce storage space requirements.

As with all lifting devices, remote-control mechanisms must be checked regularly by an expert (see page 53, "Checking the lifting links").
Worn locking bolts can be replaced. Other repairs are not permitted.

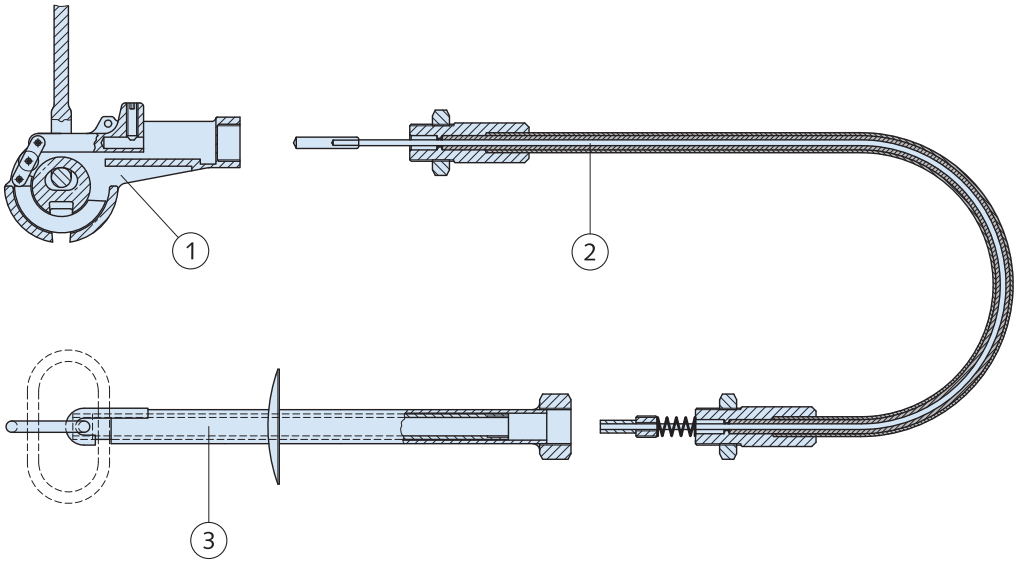


① **Clutch unit**
② **Pull cable unit**
③ **Release handle and tube**

| ① TPA-F2-KUP Clutch unit | | |
|---|---|---|
| Load class | Article number | Order no. 0071.080- |
| 2,5 | TPA-F2-KUP- 2,5 | 00001 |
| 5,0 | TPA-F2-KUP- 5,0 | 00002 |
| 10,0 | TPA-F2-KUP-10,0 | 00003 |
| 26,0 | TPA-F2-KUP-26,0 | 00004 |

| ② TPA-F2-SZE Pull cable unit | | |
|---|---|---|
| Article number | Order no. 0071.080- | Cable length |
| TPA-F2-SZE- 2,5 | 00005 | 2.5 m |
| TPA-F2-SZE- 5,0 | 00006 | 5.0 m |
| TPA-F2-SZE- 7,5 | 00007 | 7.5 m |
| TPA-F2-SZE- 10,0 | 00008 | 10.0 m |

| ③ TPA-F2-GRI Release handle and tube | |
|---|---|
| Article number | Order no. |
| TPA-F2-GRI | 0071.080-00009 |

## FRIMEDA LIFTING ANCHOR SYSTEM
# TPA-VA Steel Cover Plate

The TPA-VA is a robust and non-slip stainless steel cover plate designed to cover and protect the recess in which a cast-in FRIMEDA TPA Anchor has been installed. The cover plate is flush with the concrete surface when in place. The cover plate can be removed to access the anchor for later use, for example, for lifting inspection hole covers. In these cases always observe the corrosion protection requirements for the TPA Anchor.

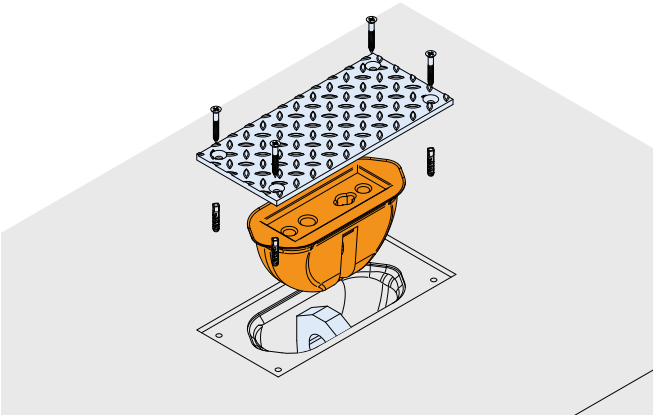

On-site installation: A TPA-A1 Recess former can be used to fill the void. A used and discarded recess former is suitable for this purpose. Fix the locking plate to the concrete using the four stainless steel countersink head screws (provided) and appropiate dowels.

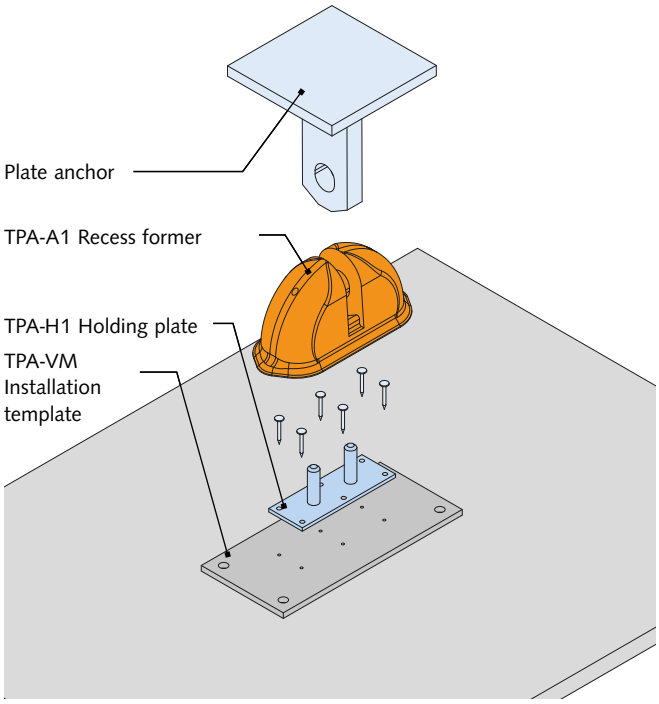


Installation in the precast element: Nail a TPA-H1 Holding plate through the installation template to the formwork at the specified postion. The positions for the nails are marked on the template. Fix the TPA-A1 Recess former and the plate anchor together and press onto the holding plate.

| TPA-VA Locking plate | | TPA-VM Installation template | | TPA-H1 Holding plate | |
|---|---|---|---|---|---|
| | | 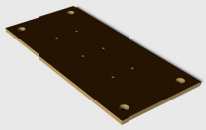 | | (for the TPA-A1, TPA-A7, TPA-A9 Recess formers) please order the TPA-H1 Holding plate separately. 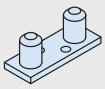 | |
| Article name | Article no. | Article name | Article no. | Article name | Article no. |
| TPA-VA 2,5 | 0073.110-00001 | TPA-VM 2,5 | 0073.120-00001 | TPA-H1 2,5 | 0073.010-00002 |
| TPA-VA 5,0 | 0073.110-00002 | TPA-VM 5,0 | 0073.120-00002 | TPA-H1 5,0 | 0073.010-00003 |
| TPA-VA 10,0 | 0073.110-00003 | TPA-VM 10,0 | 0073.120-00003 | TPA-H1 10,0 | 0073.010-00004 |
| TPA-VA 26,0 | 0073.110-00004 | TPA-VM 26,0 | 0073.120-00004 | TPA-H1 26,0 | 0073.010-00005 |

**Dimensions of the TPA-VA Locking plate [mm]**

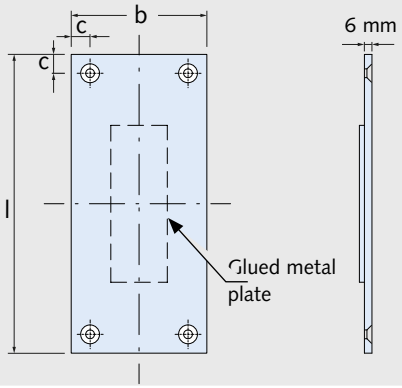


| Load class | Article name | Anti-slip metal plate A2 | | | Glued metal plate | Through-hole diameter | Countersink hole diameter |
|---|---|---|---|---|---|---|---|
| | | l | b | c | | | |
| 2,5 | TPA-VA-2,5 | 148 | 78 | 12 | 70 × 16 × 4 | 7 | 13 |
| 5,0 | TPA-VA-5,0 | 178 | 88 | 15 | 85 × 30 × 4 | | |
| 10,0 | TPA-VA-10,0 | 238 | 108 | 15 | 125 × 45 × 4 | | |
| 26,0 | TPA-VA-26,0 | 298 | 173 | 20 | 175 × 65 × 4 | | |


© 2020 HALFEN · TPA 20-E · www.halfen.com

## FURTHER HALFEN PRODUCTS
## DEHA KKT Spherical Head Anchor

The DEHA Lifting anchor system is cast into the concrete together with a recess former which will be subsequently removed.
The quick and easy universal head link is used to lift the concrete element.

**Quality features:**

- safe, quick, efficient
- anchor length identification remains visible even after installation
- abrasion resistant clutch
- for all forms and sizes of precast elements
- load class 1,3 to 45,0
- lifting hook can also be ordered with a certificate
- CE marked in accordance with the EU machinery directive guide lines since April 2012

## FURTHER HALFEN PRODUCTS
## DEHA HD Socket Lifting Anchor

The new generation of lifting system with protective cap and integrated identification cap covers the HD-Socket load range up to 25 tonnes with only nine load groups.
The anchor sleeve is also available in stainless steel.
The anchor sleeve protection system remains permanently in the sleeve and offers protection against all type of dirt.

**Quality features:**

- concise product range for load class 1,3 up to 25,0
- integrated sleeve protection with identification cap
- robust lifting clutch for increased safety and economy
- lifting clutch can also be ordered with a certificate
- CE marked since April 2012 (acc. to EU machinery directive guidelines)

## CONTACT HALFEN WORLDWIDE

**HALFEN is represented by subsidiaries in the following countries, please contact us!**

| | | | |
|---|---|---|---|
| Austria | HALFEN Gesellschaft m.b.H.<br>Leonard-Bernstein-Str. 10<br>1220 Wien | Phone: +43-1-259 6770<br>E-Mail: office@halfen.at<br>Internet: www.halfen.at | |
| Belgium / Luxembourg | HALFEN N.V.<br>Borkelstraat 131<br>2900 Schoten | Phone: +32-3-658 07 20<br>E-Mail: info@halfen.be<br>Internet: www.halfen.be | Fax: +32-3-658 15 33 |
| China | HALFEN Construction Accessories Distribution Co.Ltd.<br>Room 601 Tower D, Vantone Centre<br>No. A6 Chao Yang Men Wai Street<br>Chaoyang District<br>Beijing · P.R. China 100020 | Phone: +86-10 5907 3200<br>E-Mail: info@halfen.cn<br>Internet: www.halfen.cn | Fax: +86-10 5907 3218 |
| Czech Republic | HALFEN s.r.o.<br>Business Center Šafránkova<br>Šafránkova 1238/1<br>155 00 Praha 5 | Phone: +420 -311-690 060<br>E-Mail: info@halfen.cz<br>Internet: www.halfen.cz | Fax: +420-235-314 308 |
| France | HALFEN S.A.S.<br>18, rue Goubet<br>75019 Paris | Phone: +33-1- 445231 00<br>E-Mail: halfen@halfen.fr<br>Internet: www.halfen.fr | Fax: +33-1-44523152 |
| Germany | HALFEN Vertriebsgesellschaft mbH<br>Liebigstr. 14<br>40764 Langenfeld | Phone: +49-2173-970-0<br>E-Mail: info@halfen.de<br>Internet: www.halfen.de | Fax: +49-2173-970 225 |
| Italy | HALFEN S.r.l. Soc. Unipersonale<br>Via F.lli Bronzetti N° 28<br>24124 Bergamo | Phone: +39-035-0760711<br>E-Mail: tecnico@halfen.it<br>Internet: www.halfen.it | Fax: +39-035-0760799 |
| Netherlands | HALFEN b.v.<br>Oostermaat 3<br>7623 CS Borne | Phone: +31-74-267 14 49<br>E-Mail: info@halfen.nl<br>Internet: www.halfen.nl | Fax: +31-74-267 26 59 |
| Norway | HALFEN AS<br>Postboks 2080<br>4095 Stavanger | Phone: +47-51 82 34 00<br>E-Mail: post@halfen.no<br>Internet: www.halfen.no | |
| Poland | HALFEN Sp. z o.o.<br>Ul. Obornicka 287<br>60-691 Poznan | Phone: +48-61-622 14 14<br>E-Mail: info@halfen.pl<br>Internet: www.halfen.pl | Fax: +48-61-622 14 15 |
| Spain | HALFEN IBERICA, S.L.<br>Polígono Industrial Santa Ana c/ Ignacio Zuloaga 20<br>28522 Rivas-Vaciamadrid | Phone: +34 91 632 18 40<br>E-Mail: info@halfen.es<br>Internet: www.halfen.es | Fax: +34 91 633 42 57 |
| Sweden | Halfen AB<br>Vädursgatan 5<br>412 50 Göteborg | Phone: +46-31-98 58 00<br>E-Mail: info@halfen.se<br>Internet: www.halfen.se | Fax: +46-31-98 58 01 |
| Switzerland | HALFEN Swiss AG<br>Hertistrasse 25<br>8304 Wallisellen | Phone: +41-44-849 78 78<br>E-Mail: info@halfen.ch<br>Internet: www.halfen.ch | Fax: +41-44-849 78 79 |
| United Kingdom / Ireland | HALFEN Ltd.<br>A1/A2 Portland Close<br>Houghton Regis LU5 5AW | Phone: +44 -1582- 47 03 00<br>E-Mail: info@halfen.co.uk<br>Internet: www.halfen.co.uk | Fax: +44-1582-47 03 04 |
| United States of America | HALFEN USA Inc.<br>PO Box 18687<br>San Antonio TX 78218 | Phone: +1 800.423.91 40<br>E-Mail: info@halfenusa.com<br>Internet: www.halfenusa.com | Fax: +1 877.683.4910 |
| **For countries not listed**<br>HALFEN International | HALFEN International GmbH<br>Liebigstr. 14<br>40764 Langenfeld / Germany | Phone: +49 -2173 -970-0<br>E-Mail: info@halfen.com<br>Internet: www.halfen.com | Fax: +49 -2173-970-849 |

HALFEN is represented with sales offices and distributors worldwide. Please contact us: www.halfen.com

NOTES REGARDING THIS CATALOGUE

**Technical and design changes reserved.** The information in this publication is based on state-of-the-art technology at the time of publication. We reserve the right to make technical and design changes at any time. HALFEN GmbH shall not accept liability for the accuracy of the information in this publication or for any printing errors.

The HALFEN GmbH subsidiaries in Germany, France, the Netherlands, Austria, Poland, Switzerland and the Czech Republic are Quality Management certified according to **ISO 9001:2015**, Certificate no. 202384-2016-AQ-GER-DAkkS.

QUALITY SYSTEM CERTIFICATION DNV·GL ISO 9001 www.dnvgl.com

HALFEN

© 2020 HALFEN GmbH, Germany
applies also to copying in extracts.

PDF 01/20
T - 002 - 01/20 - E