THE INCLINE SOLID SURFACE WASH TROUGH

Technical Specification

PRODUCT CODE
395

OCTOBER 2017

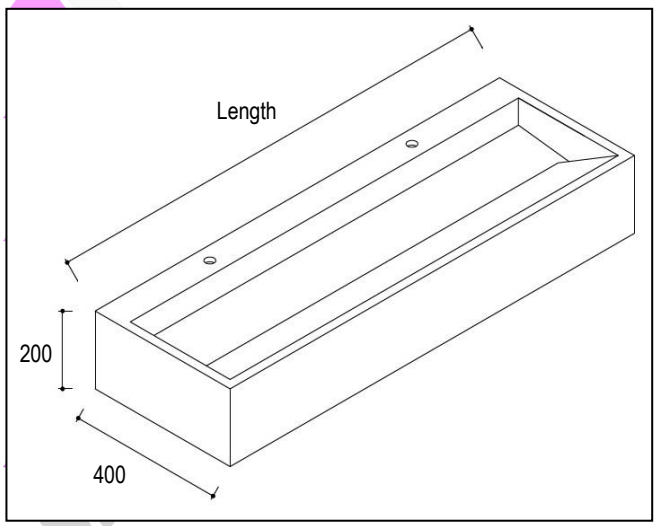

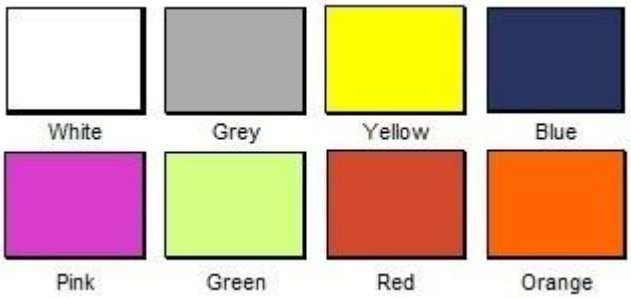

Standard colours shown are indicative and a guide only as colour rendition varies between screens and printers

Length
The solid surface wash trough is available in seven standard lengths; 600mm, 1200mm, 1500mm, 1800mm, 2400mm, 3000mm and 3600mm. Alternatively any made-to-measure length up to 3600mm can be supplied.

Waste Outlet
The solid surface wash trough is supplied as standard with a concealed 38 mm (1½ inch) BSP waste outlet connection positioned centrally.

Tap Hole Position
The solid surface nursery wash trough is produced with either one central or two tap holes per user.

Tap Hole Sizes
The standard tap hole sizes are 22mm, 28mm, 30mm and 35mm diameter.

Tap Options
All solid surface wash troughs are available with a selection of mechanical and "no-touch" sensor operated taps and spouts. Please refer to our web site for suitable products.

Soap Dispensing
All solid surface wash troughs are available with a selection of wall or deck mounted mechanical and "no-touch" sensor operated liquid soap dispensers. Please refer to our web site for suitable products.

Product Code Selection for Order or Quotation

1. Base Product Code
☐ 395-Incline solid surface wash trough, taplanding

2. Length
☐-600 ☐-1800 ☐ -3600
☐-1200 ☐-2400 ☐ -Other (please specify)
☐-1500 ☐-3000

3. Outlet (as facing)
☐-C-central

4. Tap Hole Size
☐-22mm dia ☐-28mm dia
☐-30mm dia ☐-35mm dia

5. Colour Options (standard colours – others to order)
Trough
☐-White ☐-Blue ☐-Red
☐-Grey Marta ☐-Pink ☐-Orange
☐-Yellow ☐-Green
(Other colours please specify _____)

6. Wall Mounting Brackets
☐-2 (600 trough) ☐-3 (1800 trough) ☐-6 (3600 trough)
☐-2 (1200 trough) ☐-4 (2400 trough)
☐-2 (1500 trough) ☐-5 (3000 trough)

7. Split Level "Dual Height" Trough
Please specify requirement and details

As improvements in the design and performance of Acorn Powell Limited products is continuous specifications may be subject to change without notification.

ACORN POWELL LIMITED
5 Brearley Court, Baird Road, Waterwells Business Park, Quedgeley, Gloucester GL2 2AF
Tel: 01452 721211 Fax: 01452 721231 Web: www.acornpowell.co.uk